THIS DRAWING IS UNPUBLISHED. RELEASED FOR PUBLICATION -,- .
© COPYRIGHT - By - ALL RIGHTS RESERVED.

LOC	DIST
G	02

REVISIONS

P	LTR	DESCRIPTION	DATE	DWN	APVD
	1	NEW DRAWING PER ECO-14-000577	17JAN2014	NK	DR

AMP
WIRE RANGE

22-16 AWG
SOLID OR STRANDED

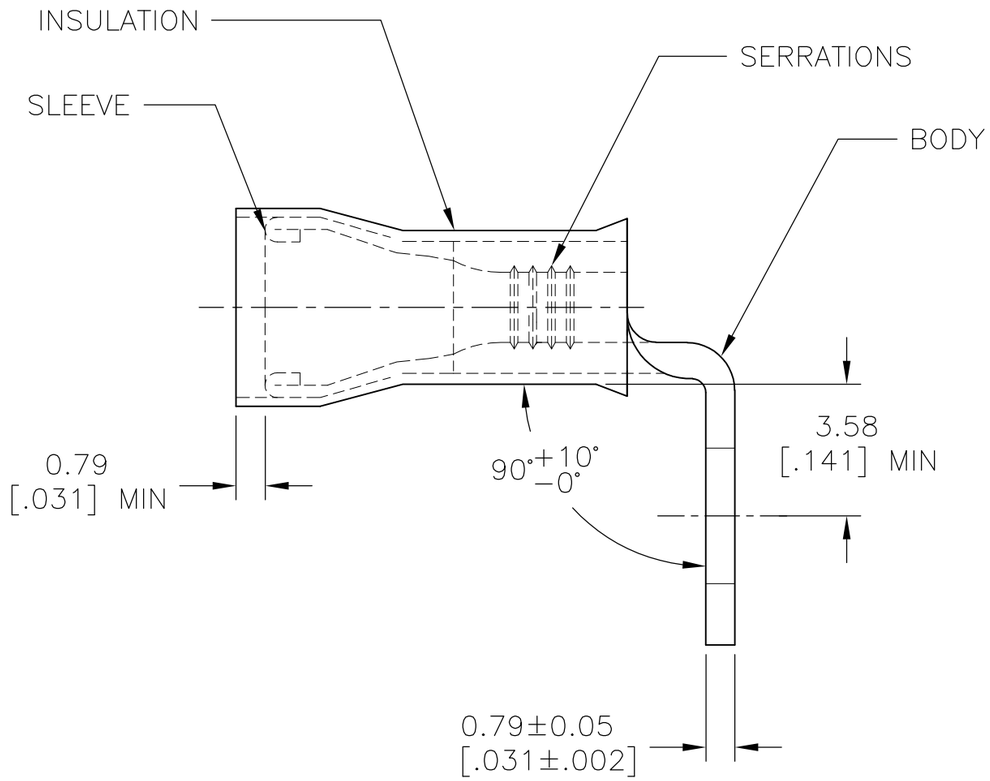

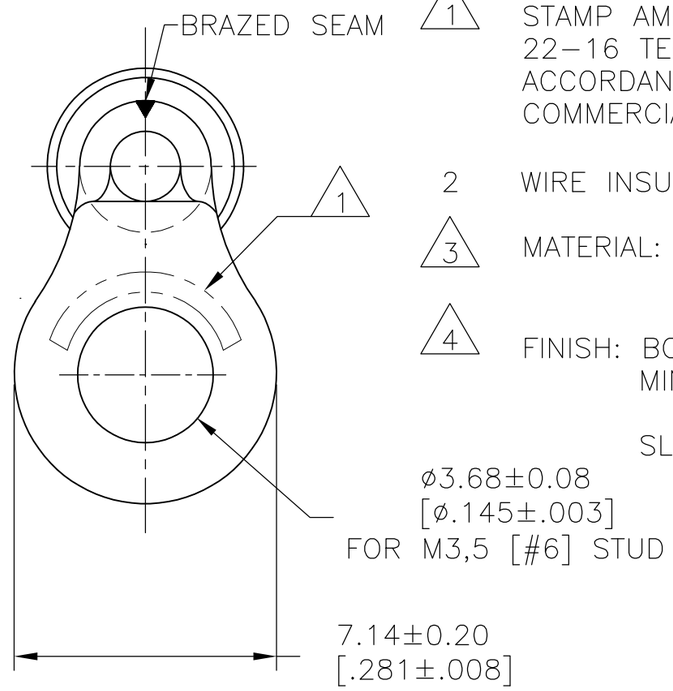

1. STAMP AMP 22-18* APPROX AS SHOWN 22-16 TERMINALS ARE STAMPED 22-18 IN ACCORDANCE WITH MILITARY SPEC SAE AS 7928 COMMERCIAL WIRE RANGE IS 22-16.

2. WIRE INSUL DIA 2.67-3.56 [.105-.140].

3. MATERIAL: BODY & SLEEVE CU PER ASTM B152
   SLEEVE-NYLON.

4. FINISH: BODY & SLEEVE- TIN PLATE 0.00254[.000100] MIN EXT. THK PER ASTM B545

   SLEEVE: COLOR-RED.

PRELIMINARY - NOT RELEASED
FOR PRODUCTION

QTY	PACKAGE TYPE	PART NO
1000	LOOSE PIECE	1958471-1

AMP INCORPORATED
CUSTOMER SERVICE SYSTEMS

FOR ADDITIONAL PRODUCT INFORMATION OR COPIES OF DRAWINGS AND TECHNICAL DOCUMENTS	PRODUCT INFORMATION CENTER 1-800-522-6752
FOR APPLICATION TOOLING INFORMATION	TOOLING ASSISTANCE CENTER 1-800-722-1111
FOR ORDER ENTRY	1-800-526-5142

THIS DRAWING IS A CONTROLLED DOCUMENT FOR AMP INCORPORATED. IT IS SUBJECT TO CHANGE AND THE CONTROLLING ENGINEERING ORGANIZATION SHOULD BE CONTACTED FOR THE LATEST REVISION.

MAX RECOMMENDED OPERATING TEMPERATURE: 105°C [221°F] MAX

VOLTAGE RATING: 300V MAX

CIRCULAR MIL AREA: 0.26-1.65mm² [509-3260] SOLID OR STRANDED

THIS DRAWING IS A CONTROLLED DOCUMENT.

DIMENSIONS: mm [INCHES]

TOLERANCES UNLESS OTHERWISE SPECIFIED:

0 PLC	± -
1 PLC	± -
2 PLC	± -
3 PLC	± .008
4 PLC	± -
ANGLES	± 5°

MATERIAL 3

FINISH 4

DWN	NAGALAKSHMI K	17JAN2014
CHK	ROHDE DANIEL	17JAN2014
APVD	ROHDE DANIEL	17JAN2014
PRODUCT SPEC	—	
APPLICATION SPEC	—	
WEIGHT	—	

TE Connectivity

NAME: TERMINAL, P.I.D.G., R 22-16
#6 90DEG
BRAZED SEAM

SIZE	CAGE CODE	DRAWING NO	RESTRICTED TO
A3	00779	C-1958471	—

CUSTOMER DRAWING | SCALE 6:1 | SHEET 1 OF 1 | REV 1

1470-19 (3/11)