DWG NO 1762902

NOTE 1. :

NOTE 2. :

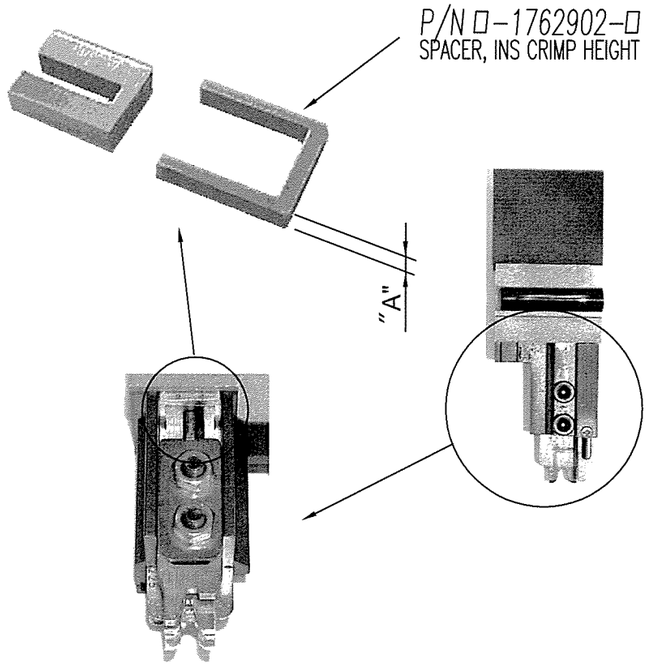

USED ON

SPACER P/N	"A" SIZE	NOTES

SPACER P/N	"A" SIZE	NOTES
4-1762902-1	3.50	
4-1762902-0	3.45	
3-1762902-9	3.40	
3-1762902-8	3.35	
3-1762902-7	3.30	
3-1762902-6	3.25	
3-1762902-5	3.20	
3-1762902-4	3.15	
3-1762902-3	3.10	
3-1762902-2	3.05	
3-1762902-1	3.00	
3-1762902-0	2.95	
2-1762902-9	2.90	
2-1762902-8	2.85	
2-1762902-7	2.80	
2-1762902-6	2.75	
2-1762902-5	2.70	
2-1762902-4	2.65	
2-1762902-3	2.60	
2-1762902-2	2.55	
2-1762902-1	2.50	
2-1762902-0	2.45	
1-1762902-9	2.40	
1-1762902-8	2.35	
1-1762902-7	2.30	
1-1762902-6	2.25	
1-1762902-5	2.20	
1-1762902-4	2.15	
1-1762902-3	2.10	
1-1762902-2	2.05	
1-1762902-1	2.00	
1-1762902-0	1.95	
1762902-9	1.90	
1762902-8	1.85	
1762902-7	1.80	
1762902-6	1.75	
1762902-5	1.70	
1762902-4	1.65	
1762902-3	1.60	
1762902-2	1.55	
1762902-1	1.50	

P	LTR	REVISION RECORD	ECN	DATE	DWN	APVD
	A	RELEASED		30 JUN 05	K.M	S.Y

THIRD ANGLE PROJECTION.
DIMENSIONS IN MILLIMETERS.
DO NOT SCALE PRINT.

TOLERANCES UNLESS OTHERWISE SPECIFIED.

ANGLES ±0°30'
UP TO 6 ±0.1 120 TO 315 ±0.5
6 TO 30 ±0.2 315 TO 1000 ±0.8
30 TO 120 ±0.3 OVER 1000 ±1.2
REMOVE BURRS, BRAKE SHARP EDGES R0.4 MAX.

MATERIAL	HEAT TREAT	FINISH
—//—	—//—	—//—

DR 30 JUN 05 K.MARUYAMA
APP 30 JUN 05 S. YABE
CHK 30 JUN 05 K.MARUYAMA
REL 30 JUN 05 S. YABE

tyco Electronics
Tyco Electronics AMP K.K.
Kawasaki, Japan

名称 (NAME) (SPACER, INS CRIMP HEIGHT)
インスクリンプハイトスペーサー

SCALE	SIZE	DRAWING NO	SHEET	REV
—//—	A3	1762902	1 OF 1	A

LOC J
DIST

THIS DRAWING IS A CONTROLLED DOCUMENT FOR AMP INCORPORATED. IT IS SUBJECT TO CHANGE AND THE CONTROLLING ENGINEERING ORGANIZATION SHOULD BE CONTACTED FOR THE LATEST REVISION.

THIS INFOMATION IS CONFIDENTIAL AND IS DISCLOSED TO YOU ON CONDITION THAT NO FURTHER DISCLOSURE IS MADE BY YOU TO OTHER THAN AMP PERSONNEL WITHOUT WRITTEN AUTHORIZATION FROM AMP INCORPORATED, HARRISBURG, PA.

AMP 3306-7 REV 10/93

(CUSTOMER DRAWING) 顧客用図面