THIS DRAWING IS UNPUBLISHED. RELEASED FOR PUBLICATION , .
© COPYRIGHT 2004 BY TYCO ELECTRONICS CORPORATION. ALL RIGHTS RESERVED.

LOC	DIST
J	

REVISIONS

P	LTR	DESCRIPTION	DATE	DWN	APVD
	O	RELEASED (FJB0-1460-04)	24DEC04	E.L	W.K

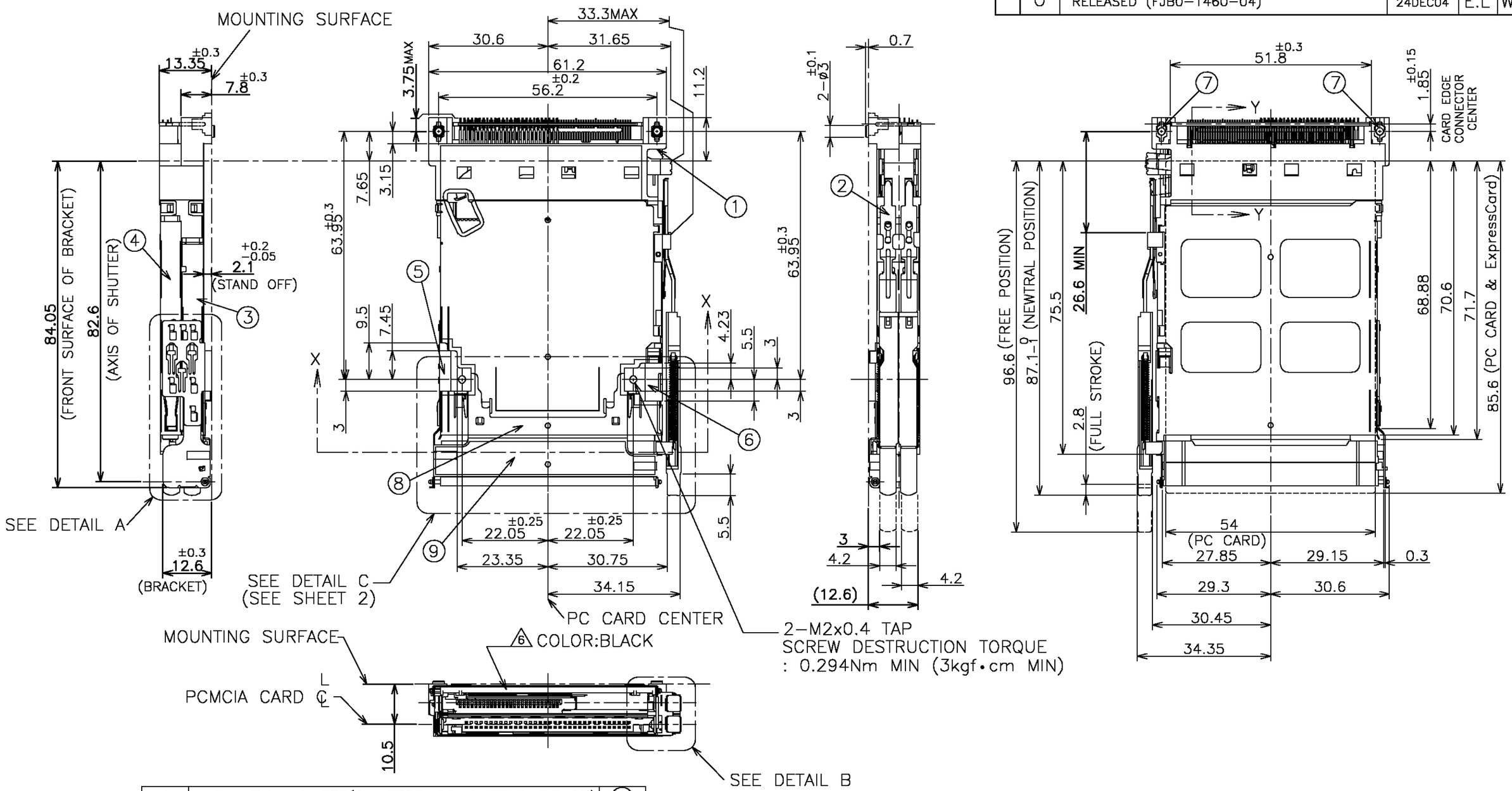

1747835−1 : AS SHOWN

QTY	NAME	ITEM
1	INSULATION SHEET(SHUTTER BRACKET SURFACE)	9
1	INSULATION SHEET	8
2	NUT(M2x0.4)	7
1	BRACKET (R)	6
1	BRACKET (L)	5
1	LOWER SHELL	4
1	UPPER SHELL	3
1	PUSH−PUSH SUB ASSY	2
1	HEADER ASSY (BOTTOM TYPE , RIGHT BUTTON)	1

THIS DRAWING IS A CONTROLLED DOCUMENT.

DIMENSIONS: MM

TOLERANCES UNLESS OTHERWISE SPECIFIED:
0 PLC ± 0.5
1 PLC ± 0.5
2 PLC ± 0.5
3 PLC ± 0.5
4 PLC ± 0.5
ANGLES ±

MATERIAL

FINISH

DWN E.LIU 24DEC04
CHK T.FUTATSUGI 24DEC04
APVD W.KODAMA 24DEC04
PRODUCT SPEC 108−78210
APPLICATION SPEC
WEIGHT −

CUSTOMER DRAWING

tyco Electronics
Tyco Electronics AMP K.K.
Kawasaki, Japan

NAME
CARDBUS−ExpressCard CONNECTOR
DBL SLOT BOTTOM MOUNT TYPE
PUSH−PUSH RIGHT BUTTON

SIZE	CAGE CODE	DRAWING NO	RESTRICTED TO
A3	00779	C−1747835	−

SCALE	SHEET	REV
1:1	1 OF 5	0

AMP 1470−19 REV 31MAR2000

THIS DRAWING IS UNPUBLISHED. RELEASED FOR PUBLICATION , .
© COPYRIGHT 2004 BY TYCO ELECTRONICS CORPORATION. ALL RIGHTS RESERVED.

LOC	DIST
J	

REVISIONS

P	LTR	DESCRIPTION	DATE	DWN	APVD
	—	SEE SHEET 1	–	—	—

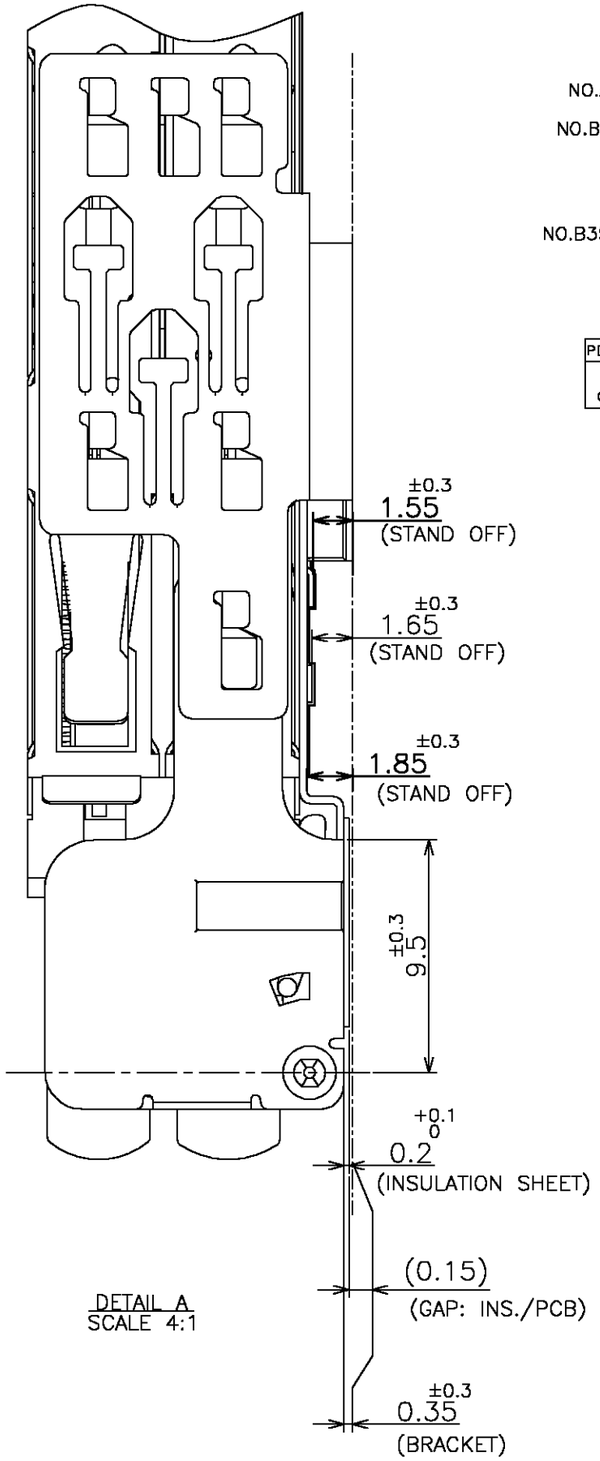

DETAIL A
SCALE 4:1

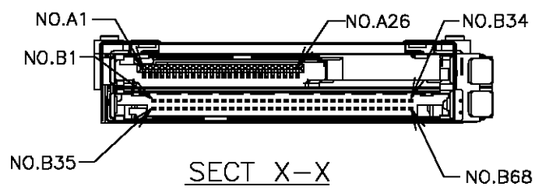

SECT X–X

5 TABLE 1

POST LENGTH	5	3.5	4.25
CIRCUIT NO.	1,17,34,35,51,68	36,67	OTHERS

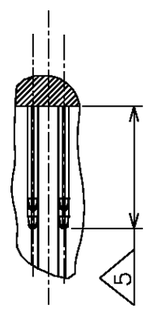

SECT Y–Y
SCALE 2:1

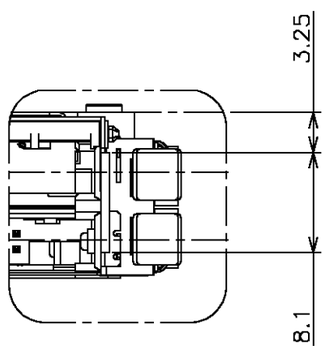

DETAIL B
SCALE 2:1

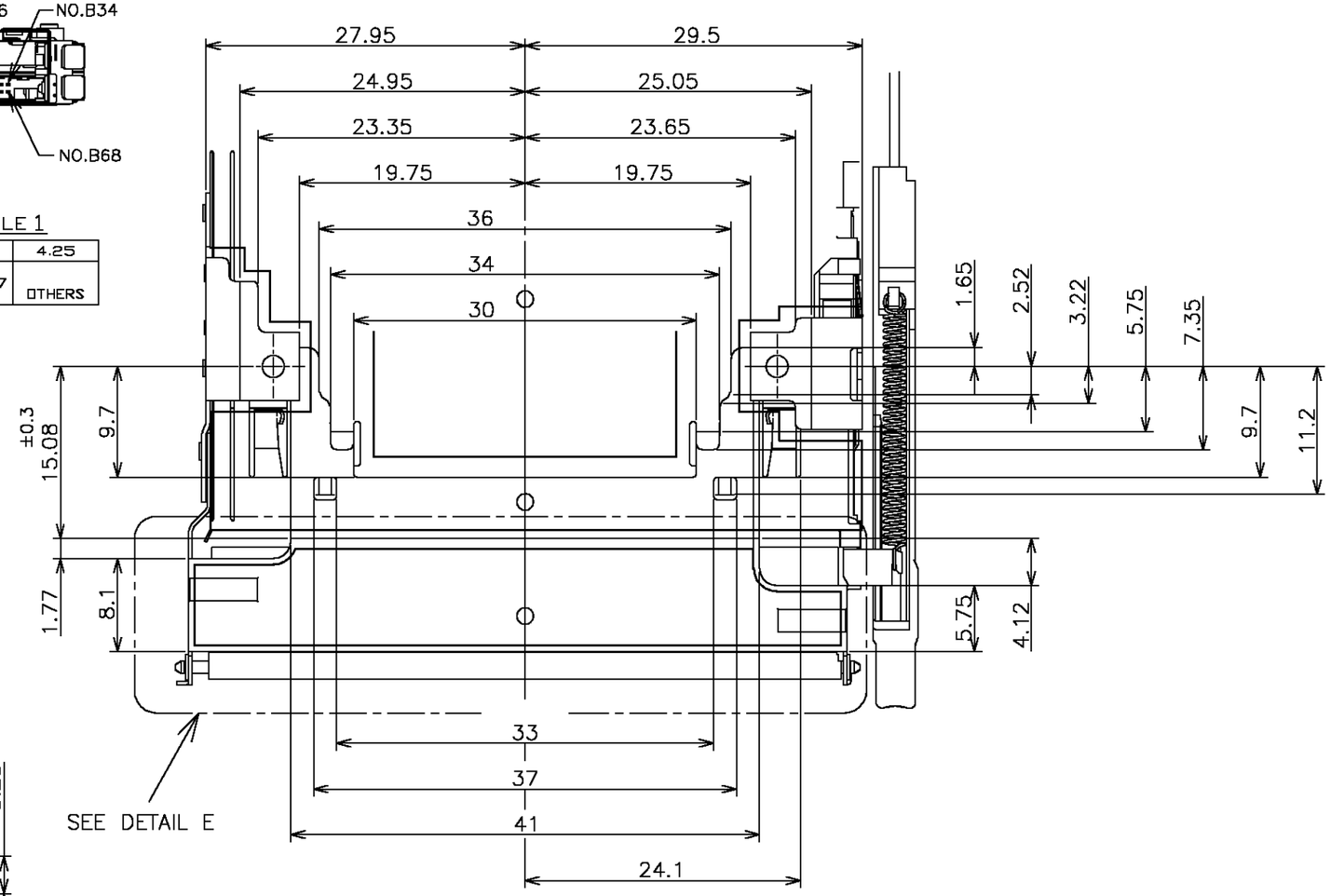

DETAIL C
SCALE 2:1

THIS DRAWING IS A CONTROLLED DOCUMENT.

DIMENSIONS: MM

TOLERANCES UNLESS OTHERWISE SPECIFIED:

0 PLC	± 0.5
1 PLC	± 0.5
2 PLC	± 0.5
3 PLC	± 0.5
4 PLC	± 0.5
ANGLES	±

MATERIAL

FINISH

DWN
CHK
APVD
PRODUCT SPEC
APPLICATION SPEC
WEIGHT —

CUSTOMER DRAWING

tyco Electronics

Tyco Electronics AMP K.K.
Kawasaki, Japan

NAME
CARDBUS–ExpressCard CONNECTOR
DBL SLOT BOTTOM MOUNT TYPE
PUSH–PUSH RIGHT BUTTON

SIZE	CAGE CODE	DRAWING NO	RESTRICTED TO
A3	00779	C-1747835	—

SCALE	SHEET	REV
1:1	2 OF 5	0

THIS DRAWING IS UNPUBLISHED. RELEASED FOR PUBLICATION , .
© COPYRIGHT 2004 BY TYCO ELECTRONICS CORPORATION. ALL RIGHTS RESERVED.

LOC	DIST
J	

REVISIONS

P	LTR	DESCRIPTION	DATE	DWN	APVD
	—	SEE SHEET 1	—	—	—

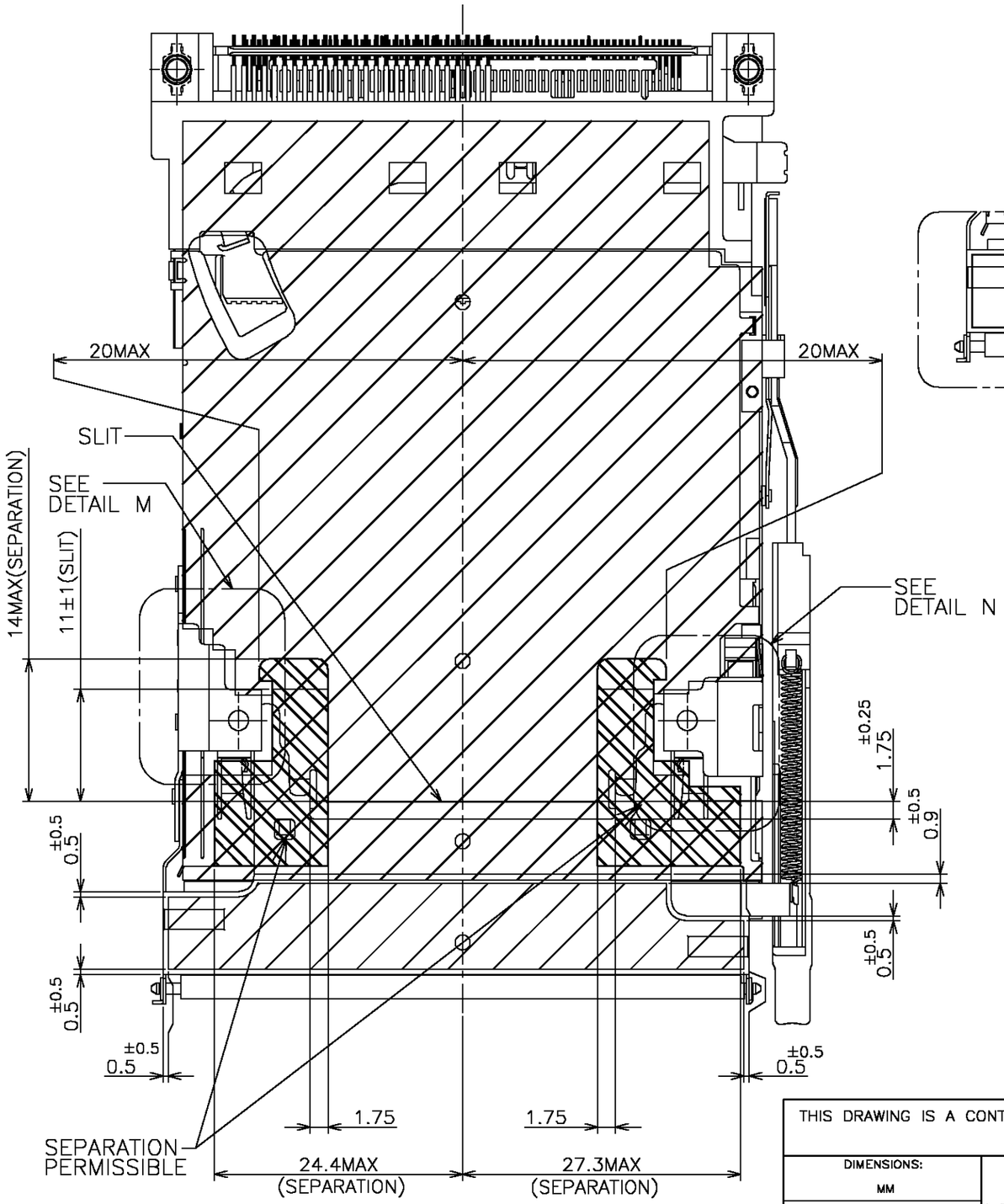

INSULATION SHEET AREA
(SCALE 2:1)

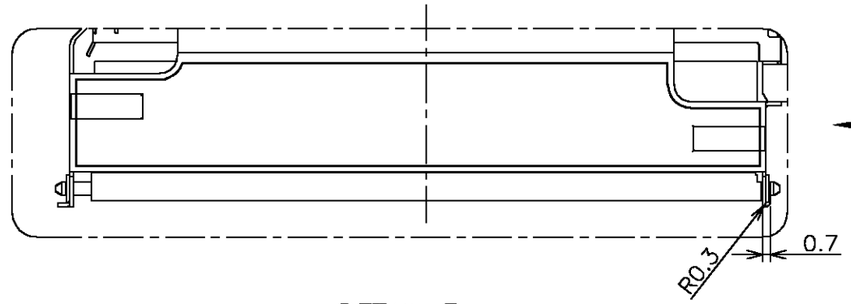

DETAIL E
(SCALE 2:1)

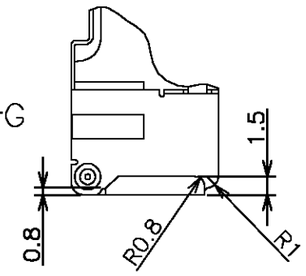

VIEW G
(SCALE 2:1)

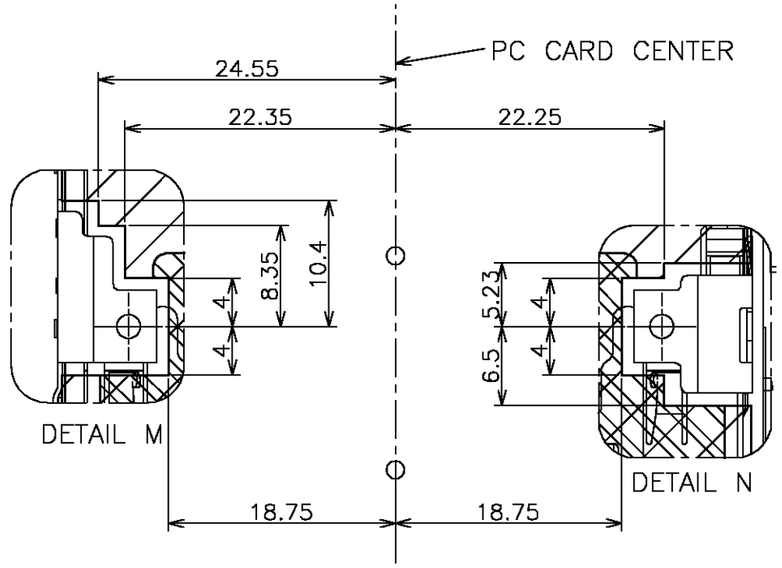

INSULATION SHEET AREA
(SCALE 2:1)

THIS DRAWING IS A CONTROLLED DOCUMENT.

DIMENSIONS: MM

TOLERANCES UNLESS OTHERWISE SPECIFIED:

0 PLC	± 0.5
1 PLC	± 0.5
2 PLC	± 0.5
3 PLC	± 0.5
4 PLC	± 0.5
ANGLES	±

MATERIAL

FINISH

DWN
CHK
APVD
PRODUCT SPEC
APPLICATION SPEC
WEIGHT —

tyco Electronics

Tyco Electronics AMP K.K.
Kawasaki, Japan

NAME
CARDBUS–ExpressCard CONNECTOR
DBL SLOT BOTTOM MOUNT TYPE
PUSH–PUSH RIGHT BUTTON

SIZE	CAGE CODE	DRAWING NO	RESTRICTED TO
A3	00779	C-1747835	—

CUSTOMER DRAWING

SCALE	SHEET	REV
1:1	3 OF 5	0

THIS DRAWING IS UNPUBLISHED. RELEASED FOR PUBLICATION , .
© COPYRIGHT 2004 BY TYCO ELECTRONICS CORPORATION. ALL RIGHTS RESERVED.

LOC	DIST
J	

REVISIONS

P	LTR	DESCRIPTION	DATE	DWN	APVD
	—	SEE SHEET 1	–	—	—

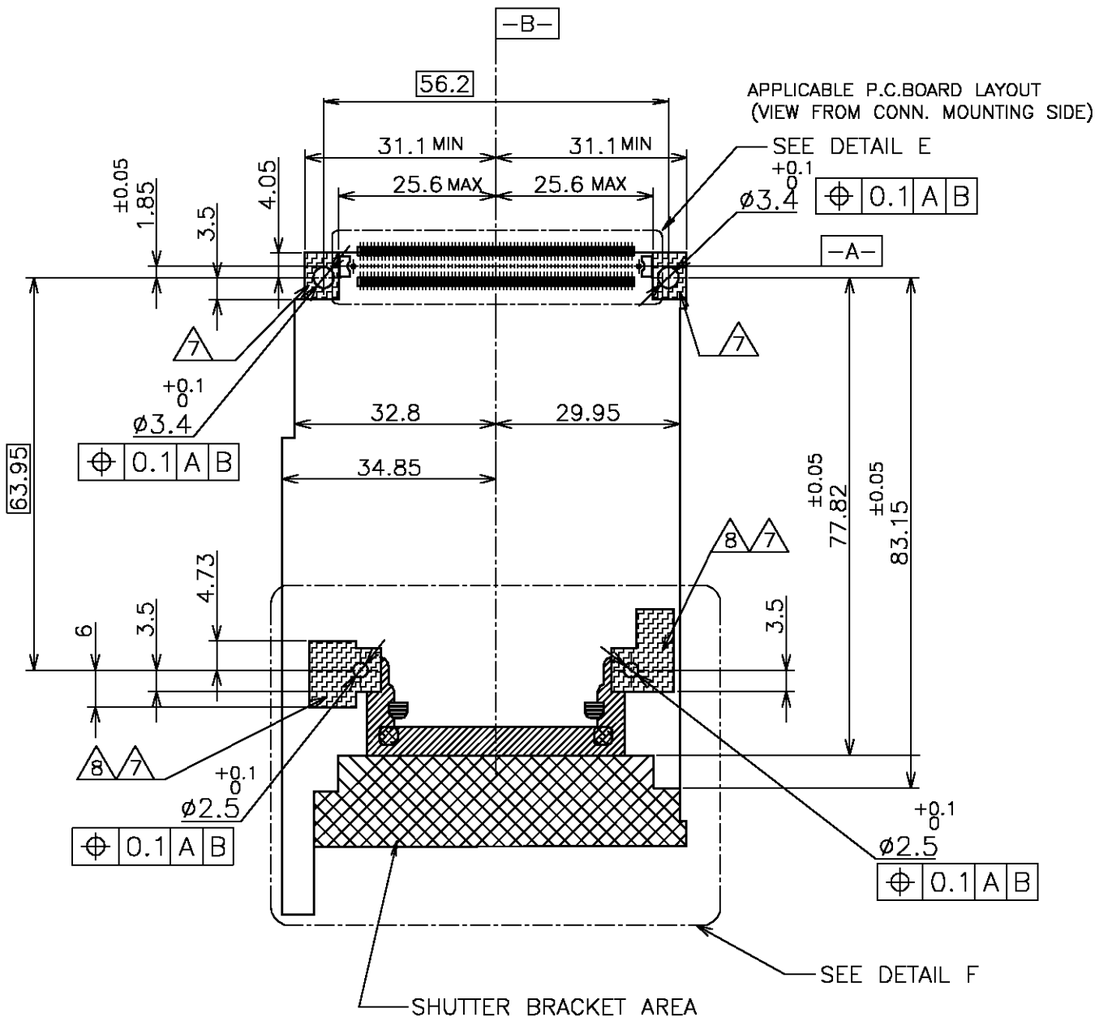

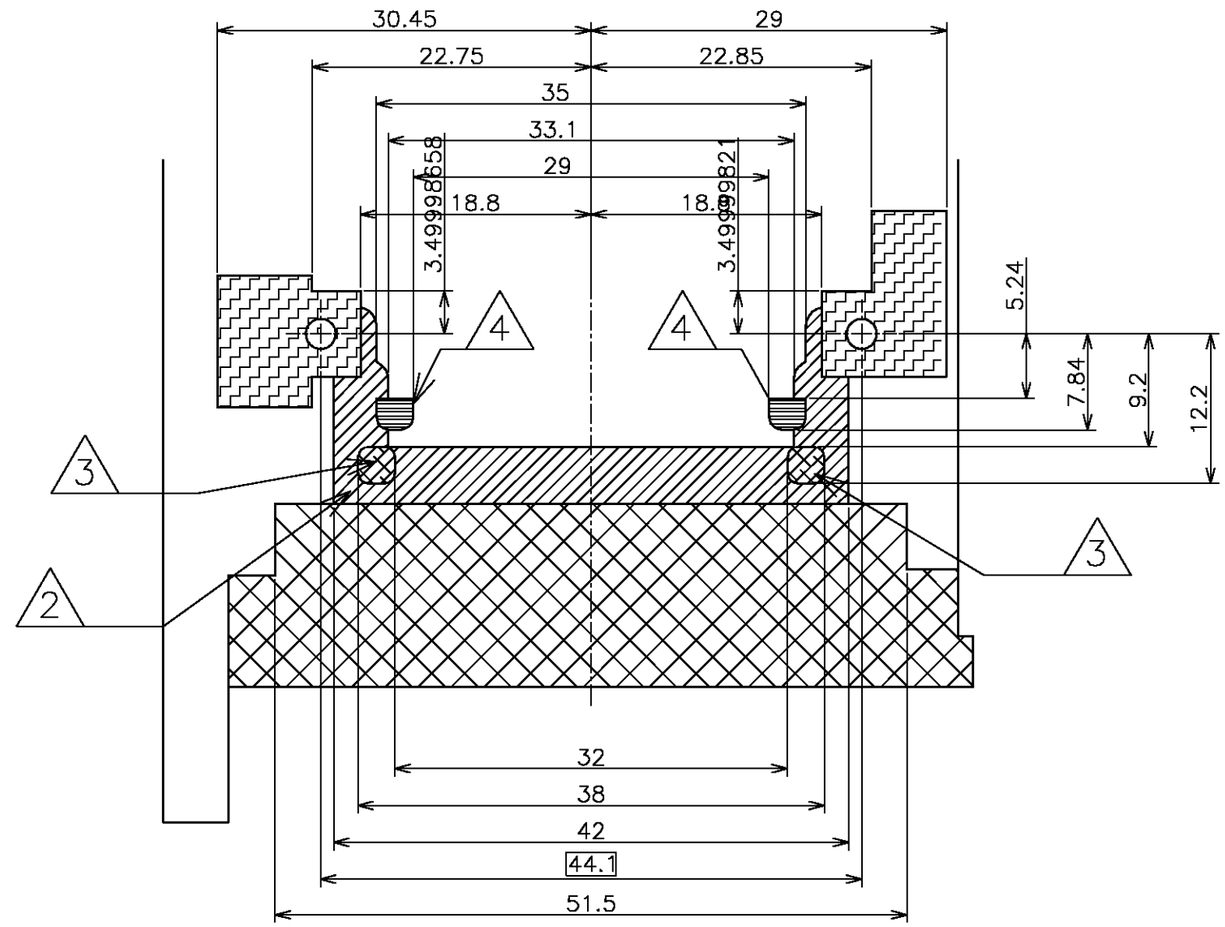

NOTE

1 RECOMMENDED TIGHTENING TORUQUE
:FROM 0.15N•m (1.5kg•cm) TO 0.2N•m(2kg•cm)

2 STAND OFF 1.85±0.3 AREA.
3 STAND OFF 1.65±0.3 AREA.
4 STAND OFF 1.55±0.3 AREA.
5 REFER TO TABLE 1 FOR POST CONTACT LENGTH.
6 KEEP OPEN CONDITION.
7 NO ELECTRONICS COMPONENTS.(NO SIGNAL LINE AREA)
8 GROUNDING PAD.

THIS DRAWING IS A CONTROLLED DOCUMENT.

DIMENSIONS: MM

TOLERANCES UNLESS OTHERWISE SPECIFIED:

0 PLC	± 0.5
1 PLC	± 0.5
2 PLC	± 0.5
3 PLC	± 0.5
4 PLC	± 0.5
ANGLES	±

MATERIAL

FINISH

DWN
CHK
APVD
PRODUCT SPEC
APPLICATION SPEC
WEIGHT —

CUSTOMER DRAWING

tyco Electronics

Tyco Electronics AMP K.K.
Kawasaki, Japan

NAME
CARDBUS–ExpressCard CONNECTOR
DBL SLOT BOTTOM MOUNT TYPE
PUSH–PUSH RIGHT BUTTON

SIZE	CAGE CODE	DRAWING NO	RESTRICTED TO
A3	00779	C-1747835	—

SCALE	SHEET	REV
1:1	4 OF 5	0

THIS DRAWING IS UNPUBLISHED. RELEASED FOR PUBLICATION , .
© COPYRIGHT 2004 BY TYCO ELECTRONICS CORPORATION. ALL RIGHTS RESERVED.

LOC J DIST

REVISIONS

P	LTR	DESCRIPTION	DATE	DWN	APVD
	—	SEE SHEET 1	–	—	—

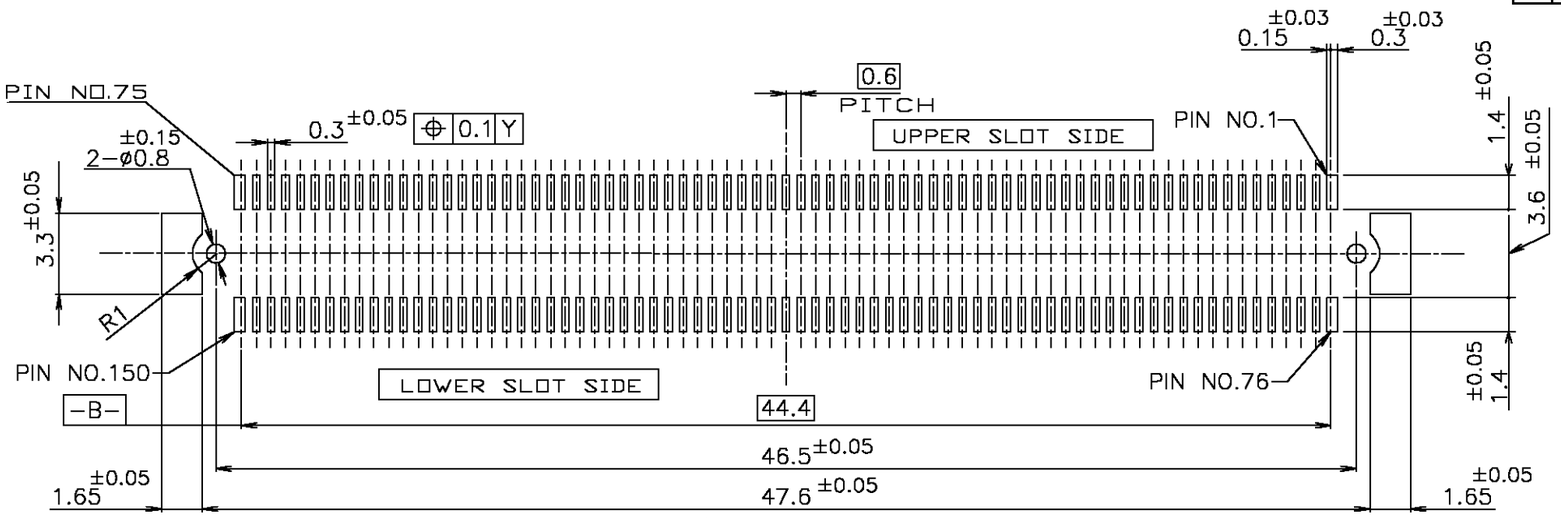

DETAIL A

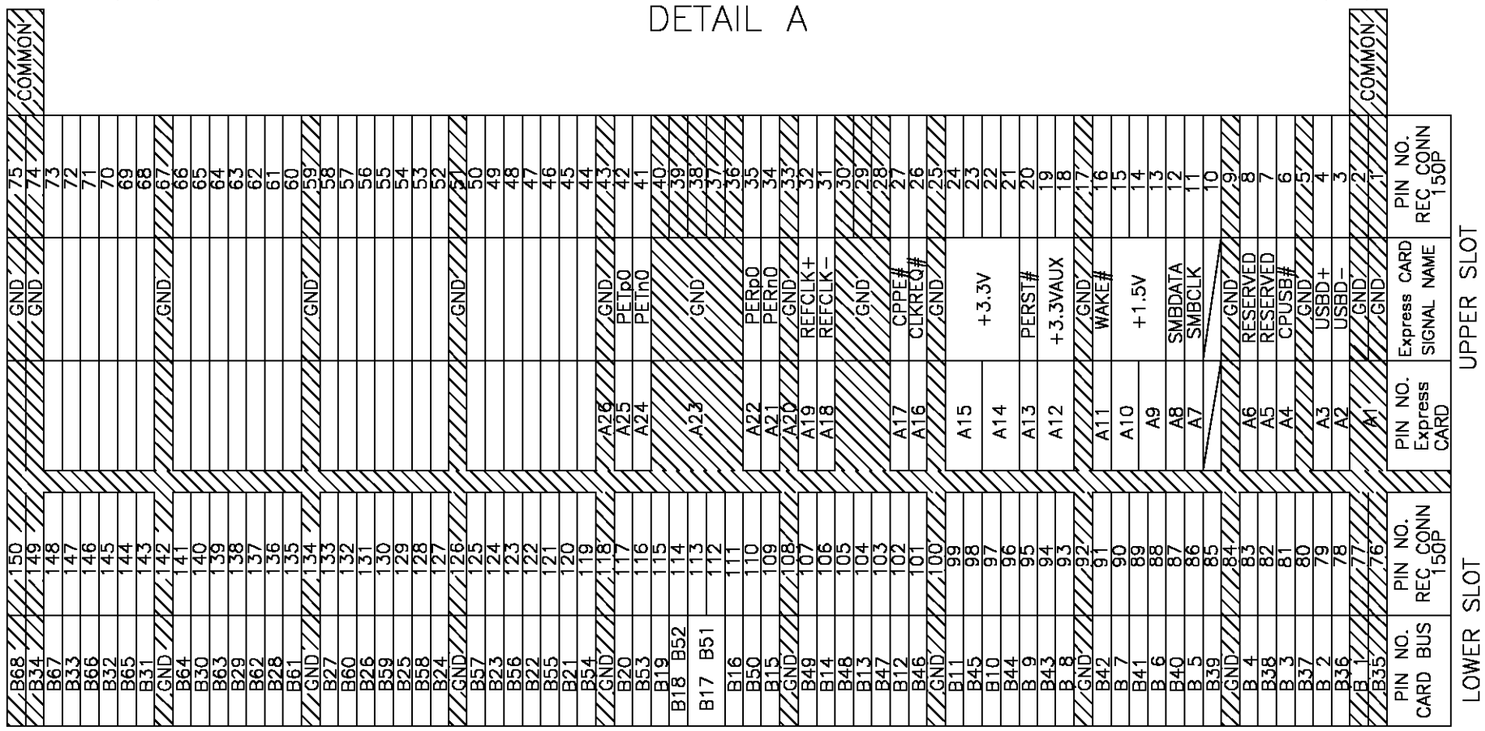

0.6mm PITCH CARD EDGE CONNECTOR FOR THIS CARDBUS PRODUCTS	
Parts Number	Description
6123215−1	HARD TRAY ASSY
6376045−1	ON TAPING(EMBOSS)

PIN ASSIGNMENT FOR BOTTOM MOUNT

THIS DRAWING IS A CONTROLLED DOCUMENT.

DIMENSIONS: MM

TOLERANCES UNLESS OTHERWISE SPECIFIED:

0 PLC	± 0.5
1 PLC	± 0.5
2 PLC	± 0.5
3 PLC	± 0.5
4 PLC	± 0.5
ANGLES	±

MATERIAL

FINISH

DWN

CHK

APVD

PRODUCT SPEC

APPLICATION SPEC

WEIGHT —

CUSTOMER DRAWING

tyco Electronics

Tyco Electronics AMP K.K.
Kawasaki, Japan

NAME
CARDBUS−ExpressCard CONNECTOR
DBL SLOT BOTTOM MOUNT TYPE
PUSH−PUSH RIGHT BUTTON

SIZE	CAGE CODE	DRAWING NO	RESTRICTED TO
A3	00779	C−1747835	—

SCALE 1:1 SHEET 5 OF 5 REV 0