THIS DRAWING IS UNPUBLISHED. RELEASED FOR PUBLICATION AUG ,2006.
© COPYRIGHT – BY TYCO ELECTRONICS CORPORATION. ALL RIGHTS RESERVED.

LOC	DIST
DW	—

REVISIONS

P	LTR	DESCRIPTION	DATE	DWN	APVD
	D	REVISED (ECO-18-006127)	20-JUN-18	K.G	WK.H

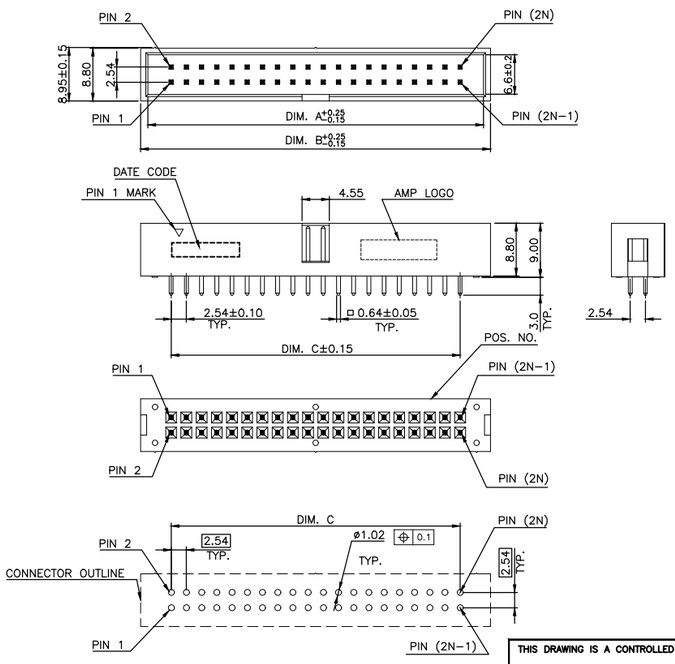

RECOMMENDED PCB LAYOUT
TOLERANCE: ±0.05

NOTES:
1. MATERIAL:
   1.1 HOUSING: PA46, UL94V-0; COLOR: SEE TABLE.
   1.2 CONTACTS: BRASS.
2. FINISH:
   CONTACT: GOLD PLATED (SEE TABLE)OVER
   1.27um [50u"]MIN. NICKEL UNDERPLATING ALL OVER
3. RECOMMENDED PCB THICKNESS : 1.60mm
4. WAVE SOLDER CAPABLE TO 265°C PER TE TEST SPEC.
   109-202, CONDITION B.
5. NET WEIGHT:
   34P :4.05 GRAMS
   40P :4.65 GRAMS

	GOLD PLATING THICKNESS	LACK PIN#	HSG COLOR	DIM. C	DIM. B	DIM. A	PART NUMBER	POS. NO.
	1.27 um [15u"] MIN.	#3, #5	BLACK	40.64	50.80	48.60	2-[illegible]-6	34P
		#5	BLACK				2-[illegible]-5	
		#5	NATURAL WHITE				2-[illegible]-4	
			BLUE (2945C)	48.26	58.42	56.02	1-[illegible]-6	40P
			BLACK				1-[illegible]-5	
			NATURAL WHITE				1-[illegible]-4	
		#20	BLUE (2945C)				[illegible]-6	
			BLACK				[illegible]-5	
			NATURAL WHITE				1734026-4	
OBSOLETE	GOLD FLASH	#3, #5	BLACK	40.64	50.80	48.60	2-[illegible]-3	34P
		#5	BLACK				2-[illegible]-2	
		#5	NATURAL WHITE				2-[illegible]-1	
			BLUE (2945C)	48.26	58.42	56.02	1-[illegible]-3	40P
			BLACK				1-[illegible]-2	
			NATURAL WHITE				1-[illegible]-1	
OBSOLETE		#20	BLUE (2945C)				[illegible]-3	
OBSOLETE			BLACK				[illegible]-2	
OBSOLETE			NATURAL WHITE				1734026-1	

THIS DRAWING IS A CONTROLLED DOCUMENT.

DIM	B. HSING	05MAR2009
CHK	S. CHIEN	05MAR2009
APVD	W. KODAMA	05MAR2009

DIMENSIONS: MM
TOLERANCES UNLESS OTHERWISE SPECIFIED:
0 PLC ± –
1 PLC ± 0.30
2 PLC ± 0.20
3 PLC ± 0.15
4 PLC ± –
ANGLES ± –

MATERIAL: SEE NOTE
FINISH: SEE NOTE

PRODUCT SPEC: 108-57390
QUALIFICATION TEST REPORT: 501-57422
WEIGHT: SEE NOTE

Tyco Electronics — Tyco Electronics Corporation, Taipei, Taiwan

NAME: BOX HEADER 2.54 PITCH VERTICAL, DIP, SERIES D

SIZE A3 | CAGE CODE 00779 | DRAWING NO C-1734026 | RESTRICTED_TO –

CUSTOMER DRAWING | SCALE – | SHEET 1 OF 2 | REV D

THIS DRAWING IS UNPUBLISHED. RELEASED FOR PUBLICATION AUG ,2006.
© COPYRIGHT – BY TYCO ELECTRONICS CORPORATION. ALL RIGHTS RESERVED.

LOC	DIST
DW	—

REVISIONS

P	LTR	DESCRIPTION	DATE	DWN	APVD
		SEE SHEET 1.			

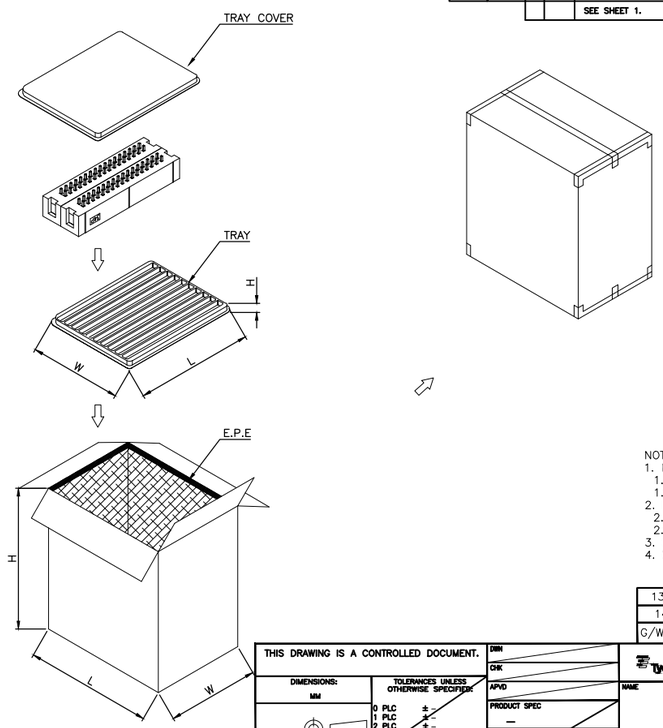

NOTES :
1. MATERIAL:
   1.1 TRAY: PVC
   1.2 BOX: CORRUGATED FIBERBOARD
2. DIMENSION :
   2.1 TRAY: L=34.5, W=27, H=2
   2.2 BOX: L=390, W=310, H=400
3. QUANTITY : SEE TABLE
4. WEIGHT : SEE TABLE

G/W (kg)	N/W (kg)	QUANTITY	PCS/TRAY	POS. NO.
13.50	11.65	2500	100	40P
14.0	12.15	3000	120	34P

THIS DRAWING IS A CONTROLLED DOCUMENT.

DIM / CHK / APVD

DIMENSIONS: MM
TOLERANCES UNLESS OTHERWISE SPECIFIED:
0 PLC ± –
1 PLC ± –
2 PLC ± –
3 PLC ± –
4 PLC ± –
ANGLES ± –

MATERIAL: –
FINISH: –

PRODUCT SPEC: –
APPLICATION SPEC: –
WEIGHT: –

Tyco Electronics — Tyco Electronics Corporation, Taipei, Taiwan

NAME: BOX HEADER 2.54 PITCH VERTICAL, DIP SERIES D

SIZE A3 | CAGE CODE 00779 | DRAWING NO C-1734026 | RESTRICTED_TO –

CUSTOMER DRAWING | SCALE – | SHEET 2 OF 2 | REV D