© 2020 TE Connectivity. All Rights Reserved.

REVISIONS 改訂					
P	LTR	DESCRIPTION	DATE	DWN	APVD
	01	REVISED ECR-05-012980	18OCT05	TS	KB
	02	REVISED ECR-09-010587	14MAY09	KF	HY
	A	REVISED ECR-09-023330	26NOV09	TS	KB
	A1	ECR-20-001927	11FEB2020	VI	MT

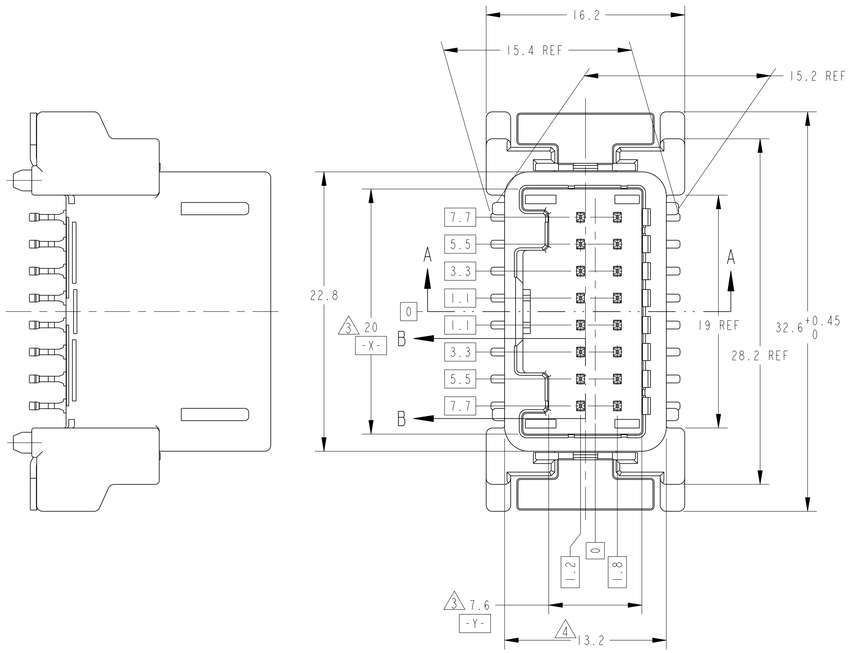

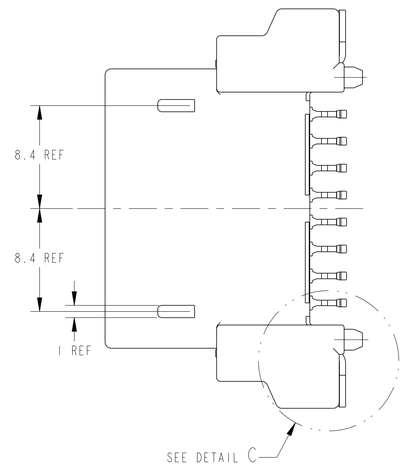

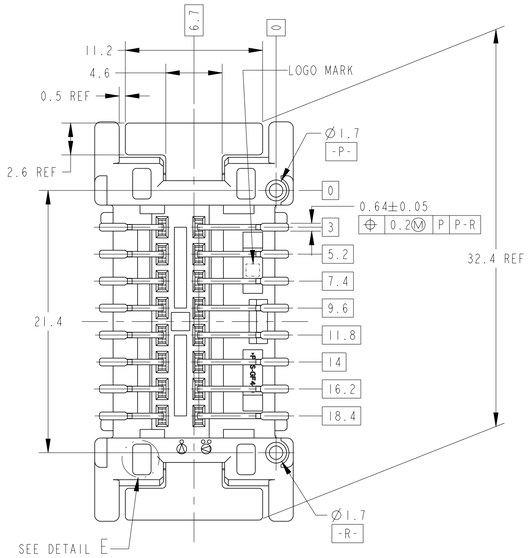

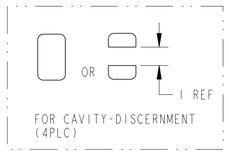

DETAIL E
SCALE 6:1

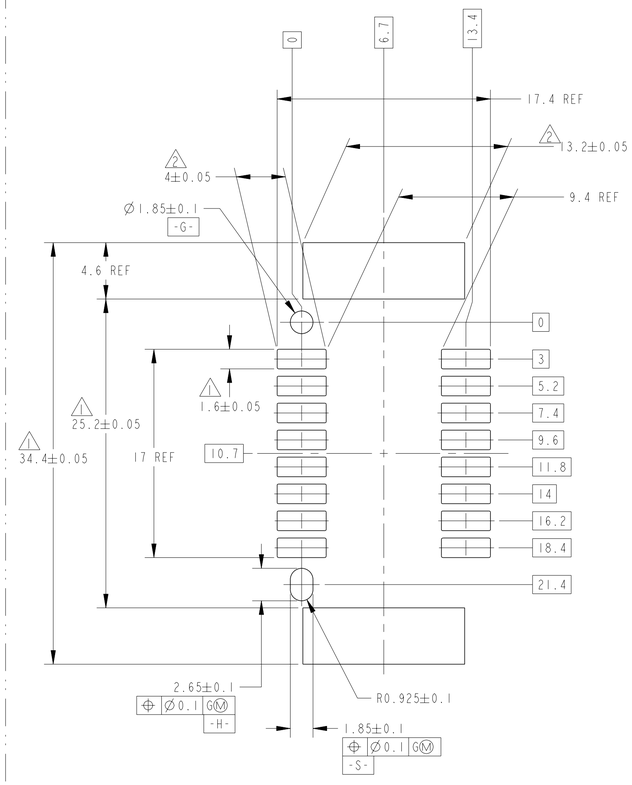

推奨基板寸法図 RECOMMEND P.C.B DIMENSIONS

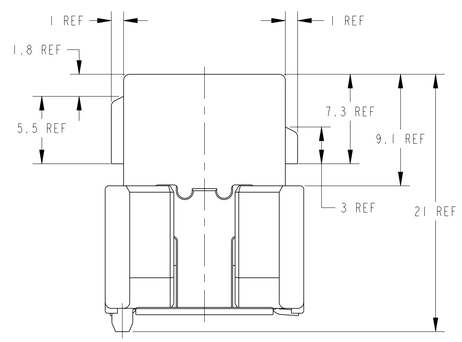

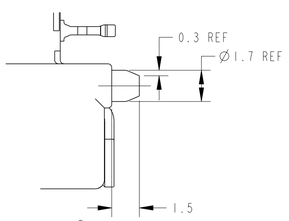

DETAIL C
SCALE 6:1

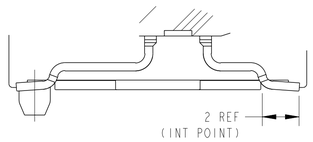

DETAIL D
SCALE 6:1

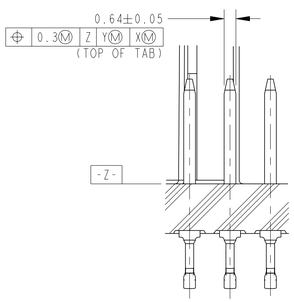

B-B
SCALE 6:1

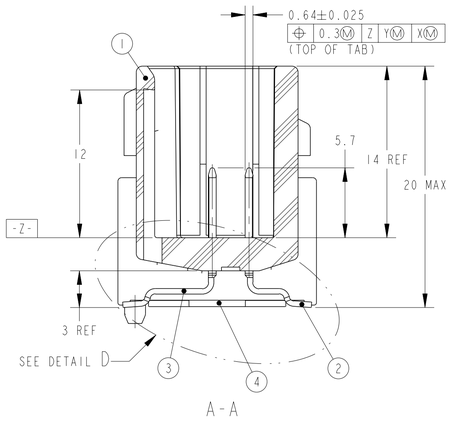

A-A

1. Ø0.1Ⓢ G G-H を適用すること
2. Ø0.1Ⓢ G G-S を適用すること
3. -Z- 面より6mmの位置で測定
4. 最大寸法で管理
5. 嵌合相手コネクタ品番：TABLE-1 参照
6. 端子構成：TABLE-2 参照
7. 本製品の取扱は取扱説明書No.411-78145に従うこと
8. 適用基板の厚さは1.6mm
9. 実装時の半田ペーストの厚さは0.15mm以上

1. POSITION TOLERANCE Ø0.1Ⓢ G G-H
2. POSITION TOLERANCE Ø0.1Ⓢ G G-S
3. MEASURED AT 6mm FROM -Z-
4. MUST BE CONTROLED AT MAXIMUM DIMENSION
5. MATING CONNECTOR PART NO.:SEE TABLE-1
6. DETAIL OF TERMINALS:SEE TABLE-2
7. HANDLING OF THIS PART SHOULD FOLLOW INSTRUCTION SHEET NO.411-78145
8. APPLICABLE PRINTED CIRCUIT BOARD'S THICKNESS 1.6mm
9. WHEN MOUNTING, THICKNESS OF SOLDER PASTE;0.15mm MIN.

TABLE-2

POS. 極数	FINISH	TYPE
16	TIN	0.64

TABLE-1

POS. 極数	TYPE	P/N
16	0.64 CRIMP	1318386
16	0.64III CRIMP	1717109
16	0.64 IDC	1318692

OUTER 外装	PAPER BOX ダンボール箱	PAPER BOX ダンボール箱	PLASTIC BOX 通い箱	PACKING STYLE 梱包形態		
INNER 内装	TRAY トレイ	PLASTIC TUBE プラスチックチューブ	PLASTIC TUBE プラスチックチューブ			
	SAME AS 1717396-1	SAME AS 1717396-1	2	SOLDER PEG	POST-TIN	4
			8	0.64 TAB CONTACT (L)	POST-TIN	3
			8	0.64 TAB CONTACT (S)	POST-TIN	2
			1	16P CAP HOUSING	BLACK	1
	1717396-3	1717396-2	1717396-1	NAME	FINISH/COLOR	NO.

THIS DRAWING IS A CONTROLLED DOCUMENT.

DIMENSIONS: 単位: 純 mm

TOLERANCES UNLESS OTHERWISE SPECIFIED: 一般公差 ±0.3; 0 PLC ±; 1 PLC ±0.1; 2 PLC ±0.01; 3 PLC ±0.001; 4 PLC ±0.0001; ANGLES ±3°

MATERIAL 材料: HOUSING ; PPS GF40; CONTACT ; BRASS; SOLDER PEG ; BRASS

FINISH 仕上: SEE TABLE

DWN Y.KAWAHARA 06JAN2005
CHK H.YAMAGAMI 06JAN2005
APVD S.ISOHATA 06JAN2005
PRODUCT SPEC 製品規格: 108-78295
APPLICATION SPEC 取付適用規格: 114-5250,-5329,-5276
WEIGHT 6.7 g

TE Connectivity

NAME 品名: 0.64 SMD CONNECTOR 16 POSITION CAP ASSEMBLY V-TYPE

SIZE A1 | CAGE CODE 00779 | DRAWING NO 製図 C-1717396 | RESTRICTED 指定

CUSTOMER DRAWING | SCALE 尺度 4:1 | SHEET 1 OF 1 | REV A1

4805 (3/13)