THIS DRAWING IS UNPUBLISHED. RELEASED FOR PUBLICATION -,- .
© COPYRIGHT - By Tyco Electronics Japan G.K. ALL RIGHTS RESERVED.

LOC	DIST
J	—

REVISIONS 変更

P	LTR	DESCRIPTION	DATE	DWN	APVD
	A	RELEASED	25MAR2015	KY	TK

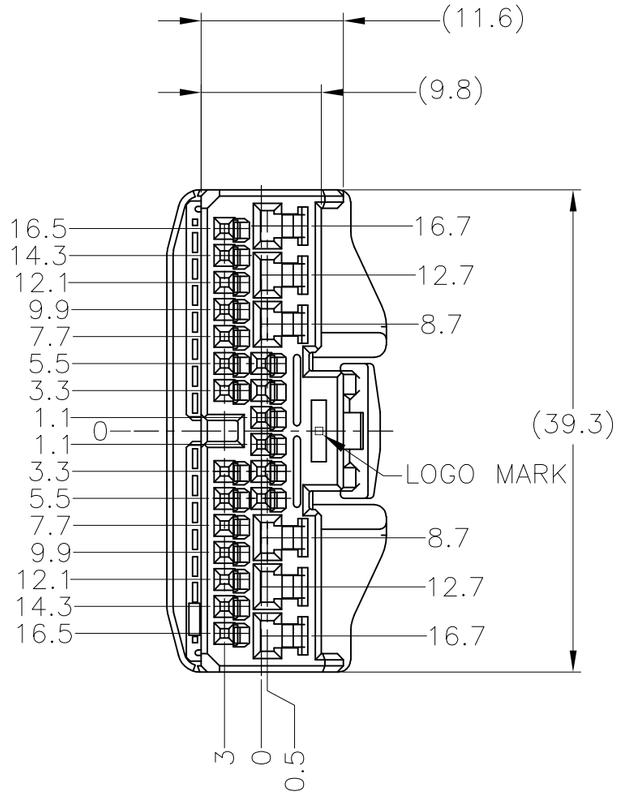

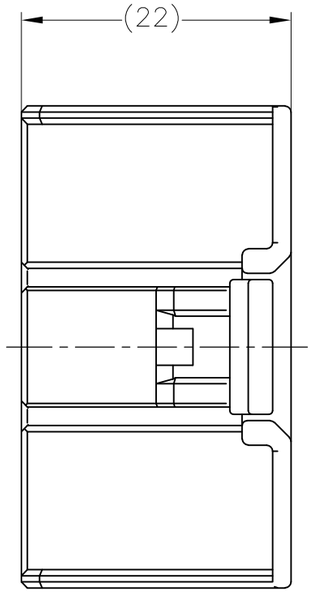

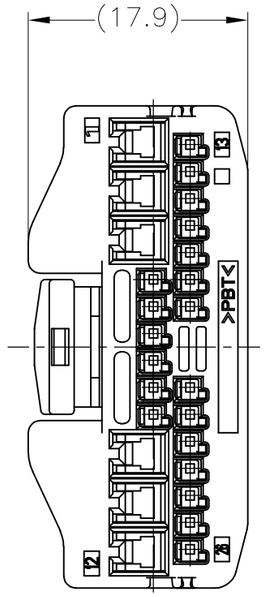

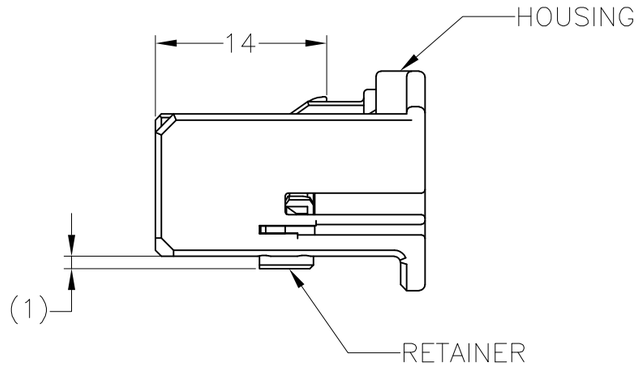

1.RETAINER SHOULD BE SENT TO THE PRE-ASSEMBLY POSITION WITHIN THE PLUG HOUSING WHEN SHIPPED TO THE CUSTOMER
2.INSTRACTION SHEET NO.411-78080
3.PART NUMBER OF CAP HOUSING TO BE MATED; SEE TABLE-1
4.APPLIED TERMINALS; SEE TABLE-2
5.CONTACT RETENTION FORCE (WITHOUT RETAINER)
49N MIN (0.64 III CONTACT ONLY)

1.プラグハウジングにリテーナを仮係止して出荷される
2.取扱説明書NO.411-78080
3.嵌合相手型番；TABLE-1参照
4.適用端子；TABLE-2参照
5.端子保持力(一次係止保持力)； 49N MIN (0.64 III 端子限定)

TABLE-1

POS 極数	CAP ASSEMBLY PART NO キャップ 型番
26	1376357

TABLE-2

		TERMINAL NO 端子型番	APPLICABLE WIRE RANGE 適用電線
SIGNAL 0.64 III	TIN	1674311-1	AVSS/CAVS/CAVUS/AVSSH-f 0.3~0.5mm²
	SELECTIVE GOLD	1674311-2	

PAPER BOX ダンボール	PLASTIC BAG ビニール袋	NATURAL	1674932-3
OUTER 外装	INNER 内装	COLOR	PART NUMBER
PACKING STYLE 梱包形態			

THIS DRAWING IS A CONTROLLED DOCUMENT.

DIMENSIONS: 単位： 粍 mm

TOLERANCES UNLESS OTHERWISE SPECIFIED: 一般公差 ±0.3
0 PLC ±
1 PLC ±
2 PLC ±
3 PLC ±
4 PLC ±
ANGLES ±3°

MATERIAL 材料: PBT
FINISH 仕上: SEE TABLE

DWN K.YOSHIMURA 25MAR2015
CHK Y.NOGUCHI 25MAR2015
APVD T.KOHNO 25MAR2015
PRODUCT SPEC 製品規格 108-5953-3
APPLICATION SPEC 取付適用規格 114-5329
WEIGHT 6.63±3%[g]

TE Connectivity

NAME 名称: 0.64III/2.3II CONNECTOR PLUG ASSEMBLY 26P

SIZE A3 | CAGE CODE 00779 | DRAWING NO 番号 C-1674932-3 | RESTRICTED TO —

CUSTOMER DRAWING | SCALE 尺度 2:1 | SHEET 1 OF 1 | REV A