THIS DRAWING IS UNPUBLISHED.
VERTRAULICHE UNVEROEFFENTLICHTE ZEICHNUNG
© COPYRIGHT – By –
RELEASED FOR PUBLICATION
FREI FUER VEROEFFENTLICHUNG
ALL RIGHTS RESERVED.
ALLE RECHTE VORBEHALTEN

PROJEKT NR. EGGMN 04410

REVISIONS
AENDERUNGEN

| P | LTR | DESCRIPTION BESCHREIBUNG | DATE | DWN | APVD |
|---|---|---|---|---|---|
| | A2 | MARKING FOR CODING ADDED ECR-06-022352 | 11-09-2006 | SR | AG |
| | B | ECR-15-007885 | 14JUL2015 | GSK | JB |

Print Image

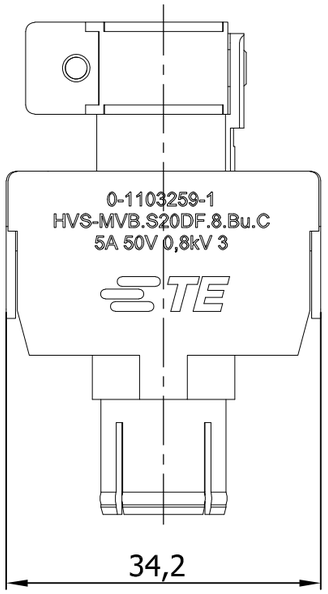


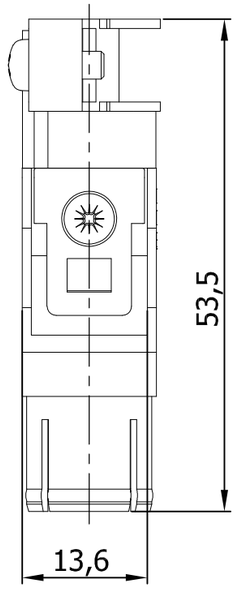


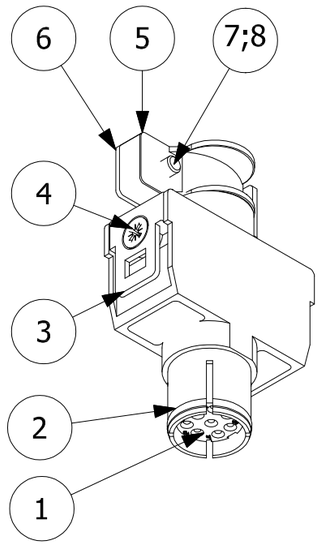


# NOTES

1 SUITABLE CRIMP CONTACTS: SERIES S20DF
CATALOG: 889745
OUTER DIMENSIONS OF INSULATION: MAX. Ø1,6 MM

2 SUITABLE MODULE FIXING FRAME: SERIES HVS SIZE 3 TO 8
CUSTOMER DRAWING: 1103250

3 SUITABLE INSERTION TOOL:
CUSTOMER DRAWING: 1102855

4 SUITABLE EXTRACTION TOOL:
CUSTOMER DRAWING: 1102855

5 STANDARDS:
DIN EN 61984; DIN EN 60664-1

△6 POLARIZATION RIPS

△7 MARKING OF POLARIZATION ACCORDING MARKING OF MODULE FRAME

8 PACKAGING:
10 SETS IN A CARTON, PRE-MOUNTED

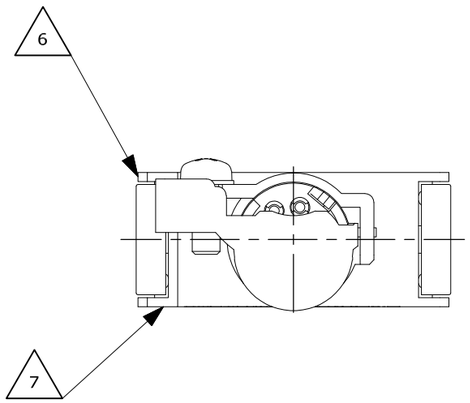


Contact arrangement

connecting side

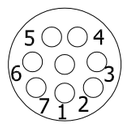


termination side

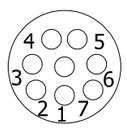


PN 0-1 AS SHOWN

| QTY. | DESCRIPTION | MATERIAL | SURFACE | COLOR | NOTE | ITEM |
|---|---|---|---|---|---|---|
| 1 | SCREW | STEEL | - | - | ISO 7045 A2 | 8 |
| 1 | SPRING WASHER, A3 | STEEL | ZINC PLATED | - | DIN 137 | 7 |
| 1 | CLOSING 3-6 MM | ZINC | - | - | - | 6 |
| 1 | CLOSING 6-9 MM | ZINC | - | - | - | 5 |
| 2 | COUNTER SUNK SCREW | Standard | - | - | - | 4 |
| 2 | MOUNTING PLATE | ZINC | - | - | - | 3 |
| 1 | FEMALE INSERT | ZINC ALLOY | - | - | - | 2 |
| 1 | contact insert female | | - | - | - | 1 |

PARTS LIST

THIS DRAWING IS A CONTROLLED DOCUMENT.
DIESE ZEICHNUNG IST EIN KONTROLLIERTES DOKUMENT.

DIMENSIONS: MASSE\NHEITEN: mm

TOLERANCES UNLESS OTHERWISE SPECIFIED: ALLGEMEINTOLERANZEN
n. ISO 8015 -
n. ISO 2768 - mH-E
n. DIN 16901- 140

0 PLC ± –
1 PLC ± –
2 PLC ± –
3 PLC ± –
4 PLC ± –
ANGLES/WINKEL ± –

MATERIAL –

FINISH/OBERFLAECHE/FARBE –

DWN SCHNEIDER 17.02.2006
CHK A.GAST 17.02.2006
APVD T.SCHNURPFEIL 17.02.2006
PRODUCT SPEC PRODUKTSPEZ. 108-74078
APPLICATION SPEC VERARBEITUNGSSPEZ. 114-74080
WEIGHT GEWICHT 0,001 KG

16.02.2006

TE Connectivity

NAME
FEMALE INSERT
HVS-MVB.S20DF.8.BU.C

| SIZE | CAGE CODE | DRAWING NO ZEICHNUNGS-NR. | RESTRICTED TO NUR FUER |
|---|---|---|---|
| A3 | 00779 | C-1103259 | — |

CUSTOMER DRAWING/KUNDENZEICHNUNG
SCALE MASSSTAB 1:1
SHEET BLATT 1 OF VON 1
REV B

1470-19 (1/15)