ITEM	PART/DRG NO	QTY	DESCRIPTION
1	01-304-0004	1	11kV ALUMINIUM BRANCH CONNECTOR BODY SPLIT TYPE - 26.9 I/D
2	01-304-0007	1	11kV ALUMINIUM BRANCH CONNECTORS SPLIT TYPE - 46.0 O/D - TOP INSERT
3	01-304-0038	1	11kV ALUMINIUM BRANCH CONNECTORS SPLIT TYPE - 46.0 O/D - SLEEVE
4	01-701-0029	6	M22x1.5 19 A/F 44.5 LONG BRASS MULTI-SHEAR BOLT
5	E91011-000	1	GREASE CONTACTSIM - SVT S0027 (SIMEL 1574829-1)

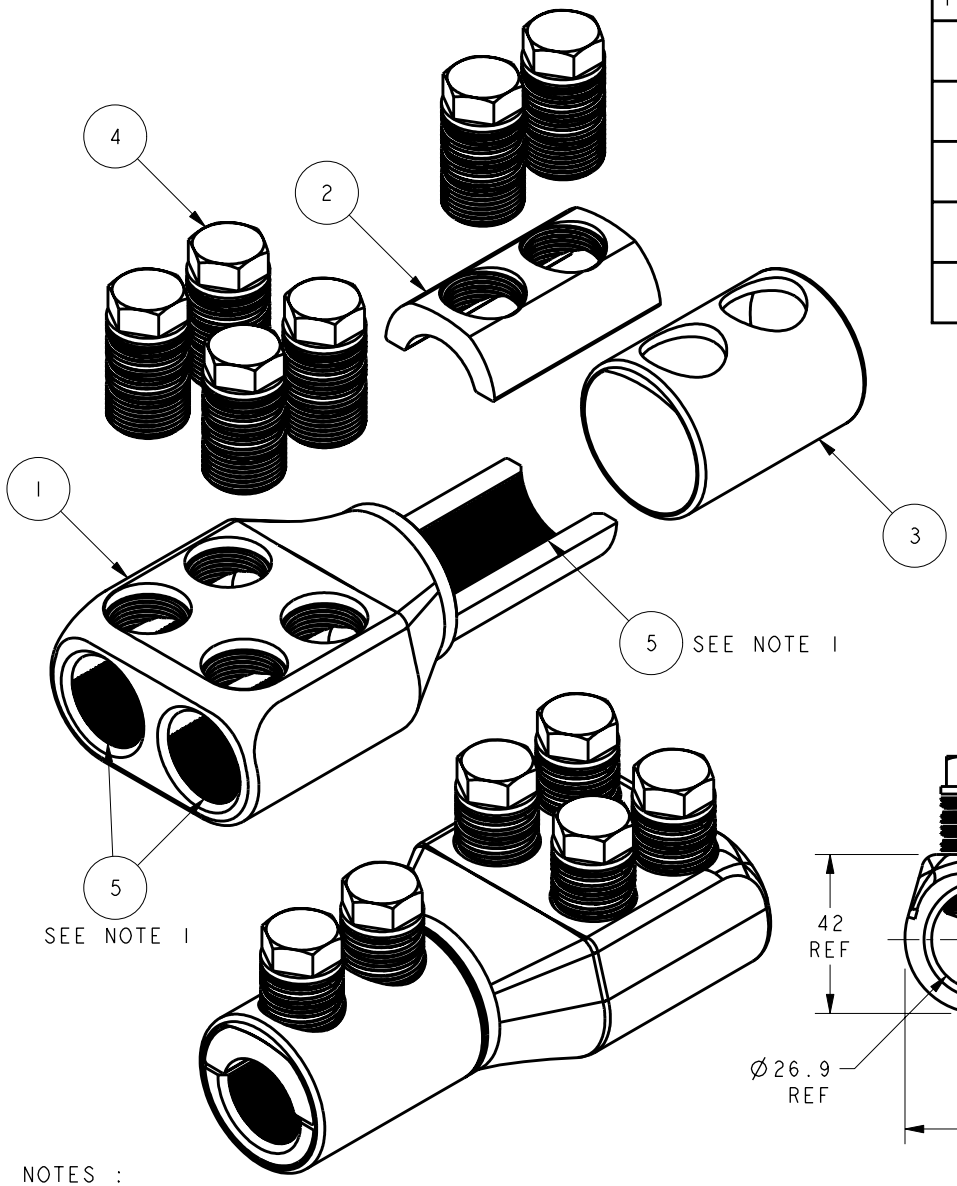

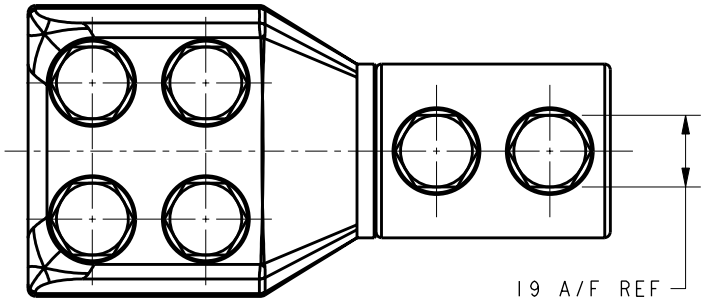

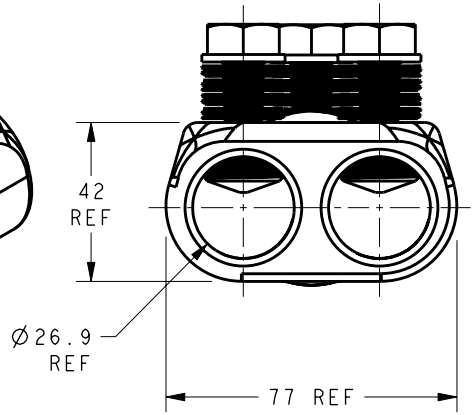

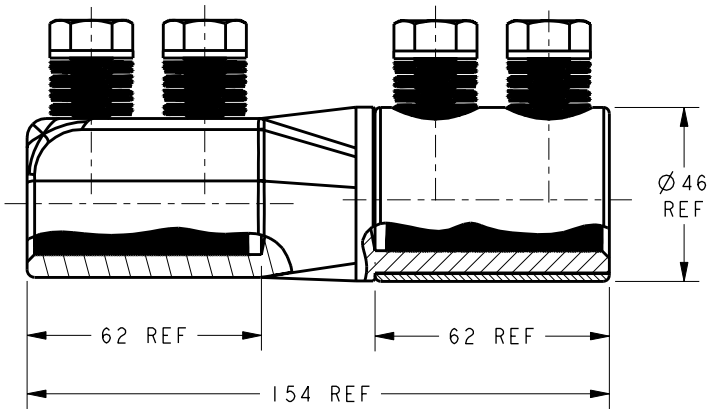

NOTES :

1. GREASE CONTACTSIM TO BE APPLIED TO ENTIRE BORE SURFACES TO FULL 62mm DEPTH ON ALL 3 BORES OF CONNECTOR BODY ONLY.

Revision	Description	Name/DMR	Date
B	NOTE 1 REVISED TO CLARIFY ALL 3 BORES ARE GREASED AND PART DESCRIPTION REVISED FROM 11kV TO MV	BH-00600	25/09/09
A	FIRST ISSUE	BH-00594	26/08/09

Tyco Electronics
Tyco Electronics UK Ltd, Freebournes Road,
Witham, Essex, CM8 3AH, UK.
Tel: +44 870 870 7500 Fax: +44 870 240 5289

Material	VARIES
Finish	VARIES
Tolerances (UOS)	N/A
B&H Short Desc.	HVBRM22SPUTC/CS

- IF IN DOUBT ASK - DO NOT SCALE -

Part Description
MV ALUMINIUM BRANCH CONNECTOR
SPLIT TYPE - 26.9 I/D
(GREASE CONTACTSIM BORE)

Design/Drawn	D M EATON	Date	26-Aug-09
Scale (UOS)	1:2		
PCN/RPN No	CP8784-000	Checked/Approved by	
Drawing/Part No	BAH-023040045	Drawing Type	ASSEMBLY/CUSTOMER
Rev	B		

THIRD ANGLE PROJECTION

A4

REMOVE ALL BURRS AND SHARP EDGES - SURFACES TO BE FREE FROM SCRATCHES AND DEFECTS - ALL THREADS TO BS3643 PT 2

© 2009 TYCO ELECTRONICS UK LTD, WITHAM, UK