THIS DRAWING IS UNPUBLISHED. RELEASED FOR PUBLICATION ,19 .
© COPYRIGHT 19 BY AMP INCORPORATED. ALL RIGHTS RESERVED.

LOC	DIST
DS	

REVISIONS

P	LTR	DESCRIPTION	DATE	DWN	APVD
	00	RELEASED(RD2003-061)	20/MAY/'03	HS	CS
	01	REVISED (ECR-10-005059)	15/MAR/'10	YM	HG

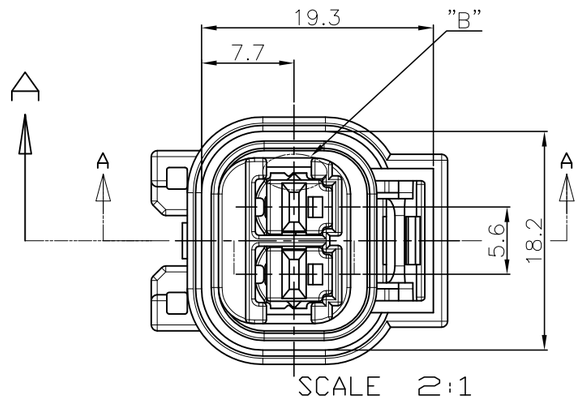

SCALE 2:1

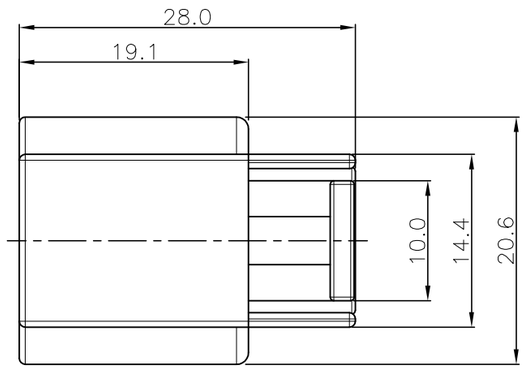

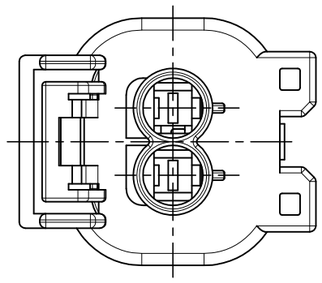

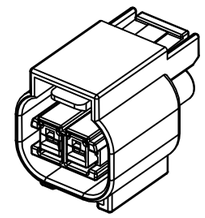

3D VIEW(SCALE 1:1)

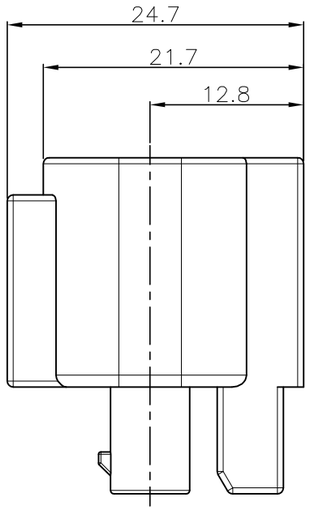

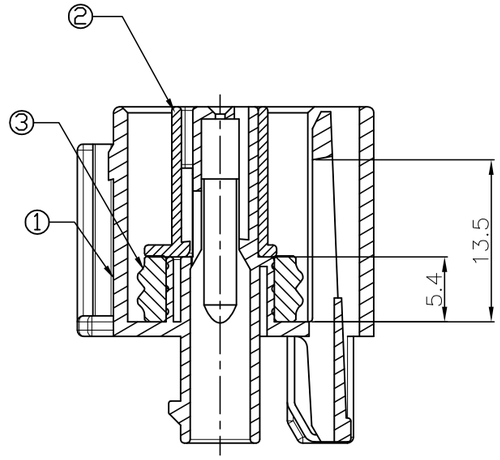

A-A

NOTES

1. CONDITION OF DELIVERY : DBL PLATE IN OPEN POSITION.
2. APPLIED RECEPTACLE CONTACT P/N:

CONTACT	JPT TERMINAL		
Part NO.	927772-3	927770-3	927766-3
WIRE SIZE(mm^2)	0.3	0.5-1.0	1.5-2.5

3. APPLIED MALE CONNECTOR P/N : 936578-1 (01)
4. APPLIED WIRE COVER HSG P/N : 936311-1
   (CORRUGATOR DIA : ø5)

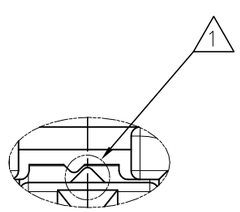

DETAIL "B"
SCALE 5:1

NO.	DESCRIPTION	P/N	MATERIAL	COLOR
3	INNER SEAL	936821-1	SILICON	RED ORANGE
2	DBL PLATE	936250-1	PBT GF10	WHITE
1	PLUG HSG	936585-2	PBT	BLACK

THIS DRAWING IS A CONTROLLED DOCUMENT FOR AMP INCORPORATED. IT IS SUBJECT TO CHANGE AND THE CONTROLLING ENGINEERING ORGANIZATION SHOULD BE CONTACTED FOR THE LATEST REVISION.

DIMENSIONS: MM

TOLERANCES UNLESS OTHERWISE SPECIFIED:
0 <XX<10 ± 0.2
10<XX<30 ± 0.25
30<XX ± 0.3
ANGLES ± 3°

3rd ANGLE PROJECTION

MATERIAL: SEE TABLE

FINISH:

DWN : YM LEE
CHK : JW JUNG
APVD : HG CHO
PRODUCT SPEC
APPLICATION SPEC
WEIGHT

Tyco Electronics
Tyco Electronics
kyungsan, korea

NAME
.090 SEALED 2P PLUG ASS'Y
FOR CHIP RISISTOR

SIZE	CAGE CODE	DRAWING NO
A3	-----	C- 936584

SCALE	SHEET	REV
2/1	1 OF 1	01