THIS DRAWING IS UNPUBLISHED. RELEASED FOR PUBLICATION -,- .
© COPYRIGHT - By - ALL RIGHTS RESERVED.

REVISIONS

P	LTR	DESCRIPTION	DATE	DWN	APVD
	G3	REVISED PER ECR-25-233701	08FEB2025	AG	RE

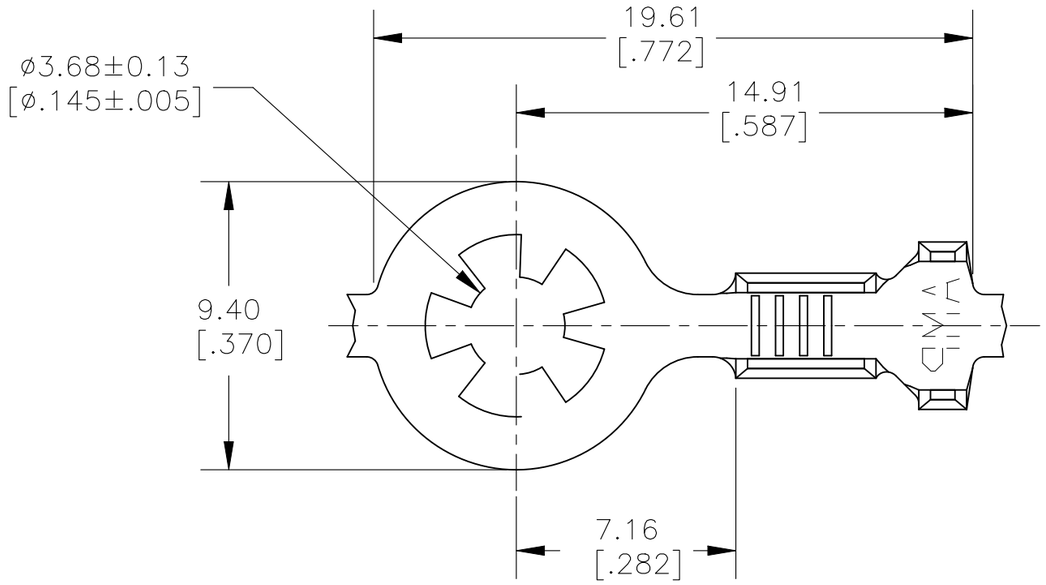

1 CONTINUOUS STRIP ON REELS.

3 WIRE SIZE 0.3–1.3mm² [22–16] AWG.

4 INSULATION RANGE ø2.54–3.56 [ø.100–.140].

5 ADD INTERLEAVING PAPER

6 PAPER SPLICE METHOD TO BE USED

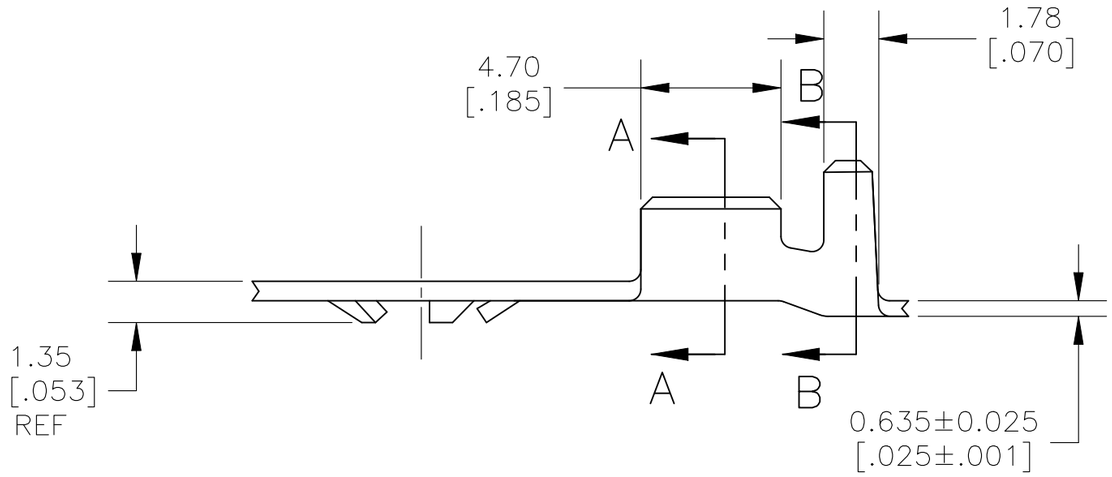

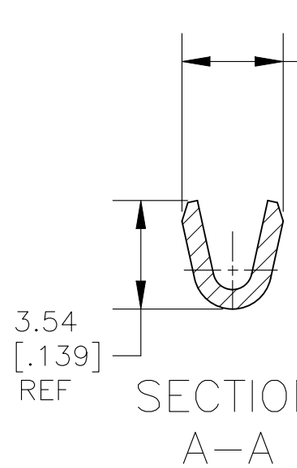

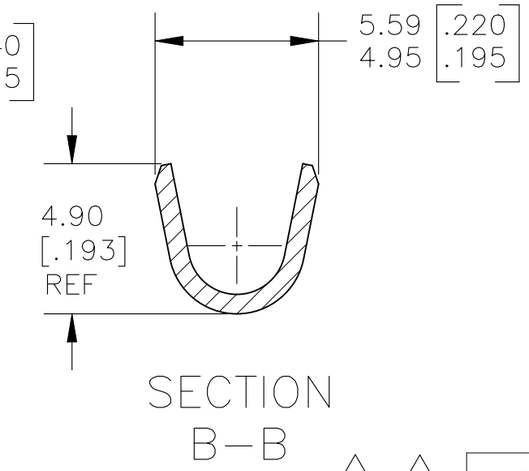

6 5

PART NO
61588-4
61588-1

TYPE	WIDTH	STRIP LENGTH ±0.38 [.015]	TYPE	WIDTH	HEIGHT ±0.05 [.002]	WIRE
F OR O OR OV	4.57 [.180] (F AND O) 3.94 [.155] (OV)	6.35 [.250]	F	2.54 [.100]	2.11 [.083]	1.3mm2 [16]
					1.96 [.077]	0.8mm2 [18]
					1.85 [.073]	0.5mm2 [20]
					1.80 [.071]	0.3mm2 [22]
INSUL BARREL CRIMP			WIRE BARREL CRIMP			

THIS DRAWING IS A CONTROLLED DOCUMENT.

DIMENSIONS: mm [INCHES]

TOLERANCES UNLESS OTHERWISE SPECIFIED:

0 PLC	± –
1 PLC	± –
2 PLC	± 0.38 [.015]
3 PLC	± –
4 PLC	± –
ANGLES	± 5°

MATERIAL: #4 HARD BRASS

FINISH: TIN

DWN	jr ruth	19JAN08
CHK	D DECKER	19JAN09
APVD	D DECKER	19JAN09
PRODUCT SPEC	—	
APPLICATION SPEC	—	
WEIGHT	—	

TE Connectivity

NAME: RING

SIZE	CAGE CODE	DRAWING NO	RESTRICTED TO
A3	00779	C-61588	—

CUSTOMER DRAWING

SCALE	SHEET	REV
5:1	1 OF 1	G3