© – TE Connectivity. All Rights Reserved.

REVISIONS					
P	LTR	DESCRIPTION	DATE	DWN	APVD
	E	REVISED PER ECO-20-013368	27SEP2020	RZ	HL

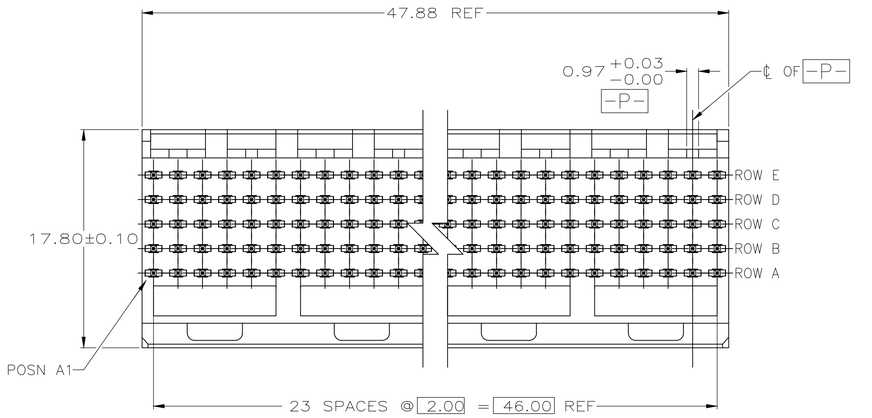

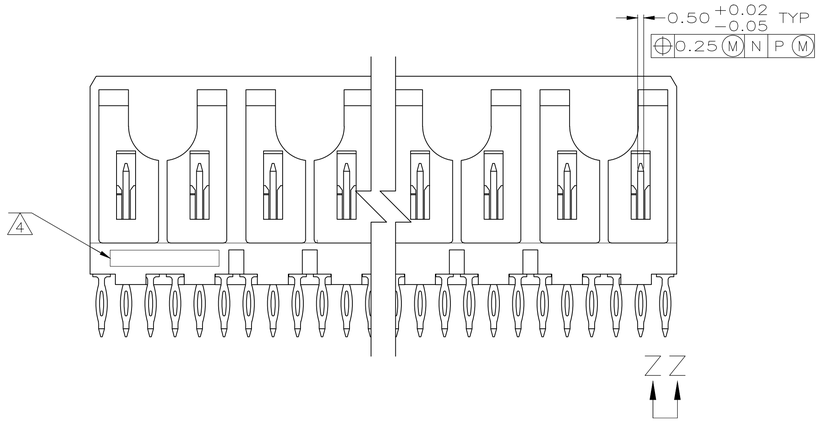

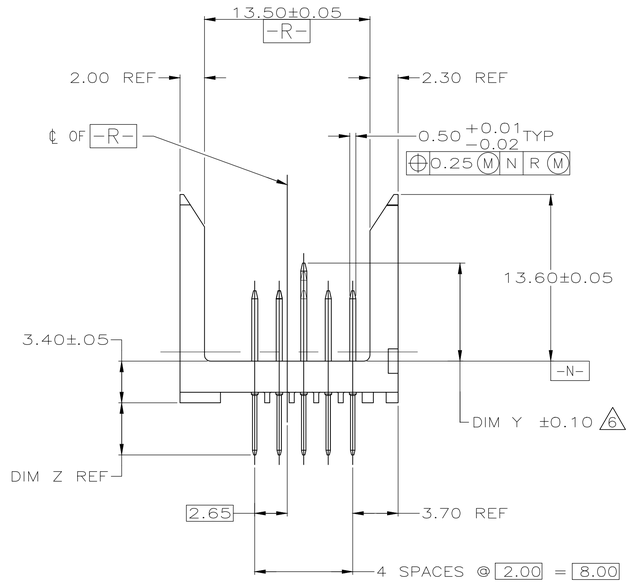

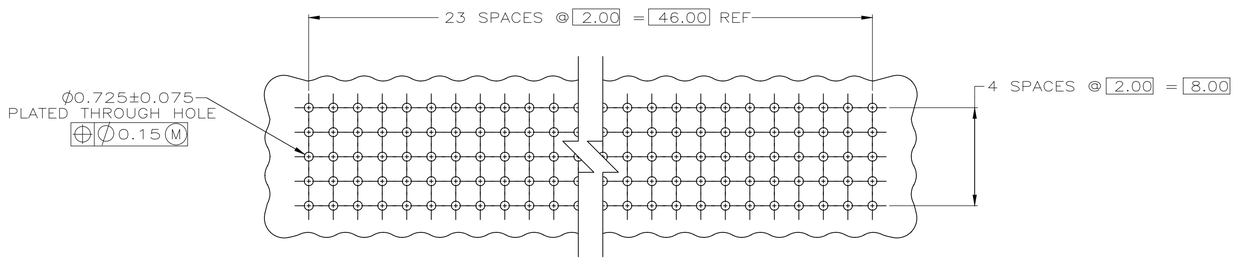

RECOMMENDED CIRCUIT PATTERN
(COMPONENT SIDE)

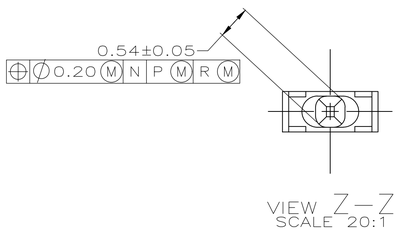

1. HOUSING MATERIAL: LIQUID CRYSTAL POLYMER.
   COLOR: NATURAL.
2. CONTACT MATERIAL: PHOSPHOR BRONZE.
3. CONTACT FINISH:(B)
   UNDERPLATE (ENTIRE CONTACT):
   0.00127 MIN NICKEL PER SAE–AMS–QQ–N–290
   ON MATING SURFACES:
   CONFORMS TO ALL TESTING SPECIFIED FOR TELCORDIA UNCONTROLLED ENVIRONMENT.
   ON LEADS:
   0.0006 MIN MATTE TIN PER ASTM B 545 OVER UNDERPLATE.
   LUBRICATION (MIN MATING SURFACES):
   SURFACE CONDITIONER AFTER PLATING.
4. PART MARKING, LOCATED APPROXIMATELY AS SHOWN.
5. SEE SHEET 2 FOR SEQUENCING CHARTS.
6. DIMENSION APPLIES WHEN SEATED ON PRINTED CIRCUIT BOARD.
7. SEE RESTRICTED CUSTOMER DRAWING 1–5223083–9.
8. SEE RESTRICTED CUSTOMER DRAWING 2–5223083–0.
9. OBSOLETE PARTS: OBSOLETE CIS STREAMLINING PER D.RENAUD/D.SINISI

		FINISH	PART NUMBER
		3	4–5223083–5
		3	4–5223083–9
		3	4–5223083–8
	OBSOLETE	3	~~3–5223083–9~~
		3	3–5223083–7
		3	3–5223083–6
9	OBSOLETE	3	~~3–5223083–5~~
	OBSOLETE	3	3–5223083–3
	OBSOLETE	3	3–5223083–2
	OBSOLETE	3	3–5223083–1
	OBSOLETE	3	3–5223083–0
	OBSOLETE	3	2–5223083–9
		3	2–5223083–7
9	OBSOLETE	3	~~2–5223083–6~~
		3	2–5223083–5
		3	2–5223083–3
8	OBSOLETE	3	~~2–5223083–0~~
7	OBSOLETE	3	1–5223083–9
		3	~~1–5223083–8~~
		3	~~1–5223083–7~~
9		3	~~1–5223083–6~~
	OBSOLETE	3	~~1–5223083–5~~
		3	~~1–5223083–4~~
		3	1–5223083–3
		3	~~1–5223083–2~~
9	OBSOLETE	3	~~1–5223083–1~~
		3	~~1–5223083–0~~
	SUPERSEDED BY 1–5223083–8	3	5223083–9
		3	~~5223083–8~~
9		3	~~5223083–7~~
	OBSOLETE	3	~~5223083–6~~
	SUPERSEDED BY 1–5223083–7	3	5223083–5
	SUPERSEDED BY 1–5223083–6	3	5223083–4
9		3	~~5223083–3~~
	OBSOLETE	3	~~5223083–2~~
	OBSOLETE	3	~~5223083–1~~

THIS DRAWING IS A CONTROLLED DOCUMENT.

DIMENSIONS: mm

TOLERANCES UNLESS OTHERWISE SPECIFIED:
0 PLC ± –
1 PLC ± –
2 PLC ± 0.13
3 PLC ± –
4 PLC ± –
ANGLES ± –

MATERIAL 1 2
FINISH 3

DWN B.MCMASTER 13DEC04
CHK R.WERTZ 13DEC04
APVD R.WERTZ 13DEC04
PRODUCT SPEC –
APPLICATION SPEC –
WEIGHT –

TE Connectivity

NAME: PIN ASSY,Z–PACK 2mm FB,SIGNAL VERTICAL 5R,120P SEQUENCED WITH PRESS FIT LEADS

SIZE A1 | CAGE CODE 00779 | DRAWING NO C–5223083 | RESTRICTED TO –

CUSTOMER DRAWING | SCALE 4:1 | SHEET 1 OF 3 | REV E

4805 (1/15)

© – TE Connectivity. All Rights Reserved.

REVISIONS					
P	LTR	DESCRIPTION	DATE	DWN	APVD
	–	SEE SHEET 1	–	–	–

E	E	E	E	E	E	E	E	E	E	E	E	E	E	E	E	E	E	E	E	E	E	E	E	E	E	E
D	E	E	E	E	E	E	E	E	E	E	E	E	E	E	E	E	E	E	E	E	E	E	E	E	E	D
C	E	E	E	E	E	E	E	E	E	E	E	E	E	E	E	E	E	E	N	N	N	T	T	C		5223083–1 OBSOLETE
B	E	E	E	E	E	E	E	E	E	E	E	E	E	E	E	E	E	E	E	E	E	E	E	B		
A	E	E	E	E	E	E	E	E	E	E	E	E	E	E	E	E	E	E	E	E	E	E	E	A		PART NUMBER
ROW	1	2	3	4	5	6	7	8	9	10	11	12	13	14	15	16	17	18	19	20	21	22	23	24	ROW	

CONTACT LOAD CHART

E																									E	
D																									D	5223083–9
C																									C	
B																									B	
A																									A	PART NUMBER
ROW	1	2	3	4	5	6	7	8	9	10	11	12	13	14	15	16	17	18	19	20	21	22	23	24	ROW	

SUPERSEDED BY 1–5223083–8

CONTACT LOAD CHART

–	–	NO CONTACT	NO CONTACT
SS	11	8.00	13.60
A	10	5.00	4.25
VV	9	8.00	14.90
Y	8	7.25	13.60
X	7	6.50	13.60
J	6	6.50	4.25
UU	4	5.75	13.60
T	3	8.00	4.25
N	2	7.25	4.25
E	1	5.75	4.25
CONTACT LETTER	ITEM NUMBER	DIM Y	DIM Z

E	E	E	E	E	E	E	E	E	E	E	E	E	E	E	E	E	E	E	E	E	E	E	E	E	E	E
D	UU	UU	UU	UU	UU	UU	UU	UU	UU	UU	UU	UU	UU	UU	UU	UU	UU	UU	UU	UU	UU	UU	UU	UU	UU	D
C	UU	UU	UU	UU	UU	UU	UU	UU	UU	UU	UU	UU	UU	UU	UU	UU	UU	UU	UU	UU	UU	UU	UU	UU	UU	C
B	UU	UU	UU	UU	UU	UU	UU	UU	UU	UU	UU	UU	UU	UU	UU	UU	UU	UU	UU	UU	UU	UU	UU	UU	UU	B
A	UU	UU	UU	UU	UU	UU	UU	UU	UU	UU	UU	UU	UU	UU	UU	UU	UU	UU	UU	UU	UU	UU	UU	UU	UU	A
ROW	1	2	3	4	5	6	7	8	9	10	11	12	13	14	15	16	17	18	19	20	21	22	23	24	ROW	

CONTACT LOAD CHART

~~5223083–2~~ 9 — PART NUMBER

E	A	A	A	A	A	A	A	A	A	A	A	A	A	A	A	A	A	A	A	A	A	A	A	J	E	
D	A	A	A	A	A	A	A	A	A	A	A	A	A	A	A	A	A	A	A	A	A	A	A	J	D	~~1–5223083–0~~ 9
C	A	A	A	A	A	A	A	A	A	A	A	A	A	A	A	A	A	A	A	A	A	A	A	A	C	
B	A	A	A	A	A	A	A	A	A	A	A	A	A	A	A	A	A	A	A	A	A	A	A	A	B	
A	A	A	A	A	A	A	A	A	A	A	A	A	A	A	A	A	A	A	A	A	A	A	A	J	A	PART NUMBER
ROW	1	2	3	4	5	6	7	8	9	10	11	12	13	14	15	16	17	18	19	20	21	22	23	24	ROW	

CONTACT LOAD CHART

E	X	X	–	X	–	X	–	X	–	X	–	X	–	X	–	X	–	X	–	X	–	X	–	X	E	
D	X	X	X	–	X	–	X	–	X	–	X	–	X	–	X	–	X	–	X	–	X	–	X	–	D	~~5223083–3~~ 9
C	X	X	–	X	–	X	–	X	–	X	–	X	–	X	–	X	–	X	–	X	–	X	–	X	C	
B	X	X	X	–	X	–	X	–	X	–	X	–	X	–	X	–	X	–	X	–	X	–	X	–	B	
A	X	X	–	X	–	X	–	X	–	X	–	X	–	X	–	X	–	X	–	X	–	X	–	X	A	PART NUMBER
ROW	1	2	3	4	5	6	7	8	9	10	11	12	13	14	15	16	17	18	19	20	21	22	23	24	ROW	

CONTACT LOAD CHART

E	–	A	A	–	–	–	–	–	–	–	–	A	A	–	–	–	–	–	–	A	A	E				
D	–	A	A	–	–	–	–	–	–	–	–	A	A	–	–	–	–	–	–	A	A	D	~~1–5223083–1~~ 9			
C	–	–	–	–	–	–	–	–	–	–	–	–	–	–	–	–	–	–	–	A	A	C				
B	–	–	–	A	A	–	A	A	–	A	A	–	–	–	A	A	–	A	A	–	A	A	B			
A	–	A	A	–	–	A	–	A	A	–	A	–	–	A	A	–	–	A	–	A	A	–	A	A	A	PART NUMBER
ROW	1	2	3	4	5	6	7	8	9	10	11	12	13	14	15	16	17	18	19	20	21	22	23	24	ROW	

CONTACT LOAD CHART

E	E	E	–	E	E	E	E	E	E	E	E	E	E	E	E	E	E	E	E	E	E	N	E			
D	E	–	E	E	E	E	E	E	E	E	E	E	E	E	E	E	E	E	E	E	E	N	D	~~1–5223083–7~~ 9		
C	–	–	E	E	E	E	E	E	E	E	E	E	E	E	E	E	E	E	E	E	E	N	C			
B	E	–	E	E	E	E	E	E	E	E	E	E	E	E	E	E	E	E	E	E	E	E	B			
A	E	–	E	E	E	E	E	E	E	E	E	E	E	E	E	E	E	E	E	E	E	E	A		PART NUMBER	
ROW	1	2	3	4	5	6	7	8	9	10	11	12	13	14	15	16	17	18	19	20	21	22	23	24	ROW	

CONTACT LOAD CHART

E																									E	
D																									D	5223083–4
C																									C	
B																									B	
A																									A	PART NUMBER
ROW	1	2	3	4	5	6	7	8	9	10	11	12	13	14	15	16	17	18	19	20	21	22	23	24	ROW	

SUPERSEDED BY 1–5223083–6

CONTACT LOAD CHART

E	J	J	J	J	J	J	J	J	J	J	J	A	J	J	J	J	T	T	T	T	T	E				
D	J	J	J	J	J	J	J	J	J	J	J	J	J	J	J	J	N	N	N	N	N	D	~~1–5223083–2~~ 9			
C	J	J	J	J	J	J	J	J	J	J	J	J	J	J	J	J	N	N	N	N	N	C				
B	J	J	J	J	J	J	J	J	J	J	J	J	J	J	J	J	N	N	N	N	N	B				
A	J	J	J	J	J	J	J	J	J	J	J	J	J	J	J	J	N	N	N	N	N	A		PART NUMBER		
ROW	1	2	3	4	5	6	7	8	9	10	11	12	13	14	15	16	17	18	19	20	21	22	23	24	ROW	

CONTACT LOAD CHART

E	E	E	–	E	–	E	–	E	–	E	–	E	–	E	–	E	–	E	–	E	E	E	E			
D	E	E	E	–	E	–	E	–	E	–	E	–	E	–	E	–	E	–	E	–	E	–	D	~~1–5223083–8~~ 9		
C	E	E	–	E	–	E	–	E	–	E	–	E	–	E	–	E	–	E	–	E	–	E	C			
B	E	E	E	–	E	–	E	–	E	–	E	–	E	–	E	–	E	–	E	–	E	–	B			
A	E	E	–	E	–	E	–	E	–	E	–	E	–	E	–	E	–	E	–	E	–	E	A		PART NUMBER	
ROW	1	2	3	4	5	6	7	8	9	10	11	12	13	14	15	16	17	18	19	20	21	22	23	24	ROW	

CONTACT LOAD CHART

E																									E	
D																									D	5223083–5
C																									C	
B																									B	
A																									A	PART NUMBER
ROW	1	2	3	4	5	6	7	8	9	10	11	12	13	14	15	16	17	18	19	20	21	22	23	24	ROW	

SUPERSEDED BY 1–5223083–7

CONTACT LOAD CHART

E	J	T	A	A	A	A	A	A	A	A	A	A	A	A	A	A	A	A	A	A	A	T	E			
D	J	T	A	A	A	A	A	A	A	A	A	A	A	A	A	A	A	A	A	A	A	T	D	1–5223083–3		
C	J	T	A	A	A	A	A	A	A	A	A	A	A	A	A	A	A	A	A	A	A	T	C			
B	J	T	A	A	A	A	A	A	A	A	A	A	A	A	A	A	A	A	A	A	A	T	B			
A	J	T	A	A	A	A	A	A	A	A	A	A	A	A	A	A	A	A	A	A	A	T	A		PART NUMBER	
ROW	1	2	3	4	5	6	7	8	9	10	11	12	13	14	15	16	17	18	19	20	21	22	23	24	ROW	

CONTACT LOAD CHART

E	E	–	E	–	E	–	E	–	E	–	E	–	E	–	E	–	E	–	E	E	E	E				
D	–	–	–	–	–	–	–	–	–	–	–	–	–	–	–	E	N	E	E	E	E	D				
C	E	–	N	–	E	–	E	–	E	–	E	–	N	–	E	–	E	E	N	N	N	C	1–5223083–9 OBSOLETE 7			
B	–	–	–	–	–	–	–	–	–	–	–	–	–	–	–	–	E	E	N	A	A	B				
A	E	–	E	–	E	–	E	–	E	–	E	–	E	–	E	–	E	E	N	E	E	A		PART NUMBER		
ROW	1	2	3	4	5	6	7	8	9	10	11	12	13	14	15	16	17	18	19	20	21	22	23	24	ROW	

CONTACT LOAD CHART

E	X	–	X	–	–	X	X	X	X	X	X	Y	X	X	X	X	X	X	X	X	X	X	E			
D	–	X	–	–	–	Y	X	X	X	X	X	Y	X	X	X	X	X	X	X	X	X	D	~~5223083–6~~ 9			
C	X	–	X	–	–	X	X	X	X	X	X	X	X	X	X	X	X	X	X	X	X	C				
B	–	X	–	–	–	X	X	X	X	X	X	X	X	X	X	X	X	X	X	X	X	B				
A	X	–	X	–	–	X	X	X	X	X	X	X	X	X	X	X	X	X	X	X	X	A		PART NUMBER		
ROW	1	2	3	4	5	6	7	8	9	10	11	12	13	14	15	16	17	18	19	20	21	22	23	24	ROW	

CONTACT LOAD CHART

E	A	A	A	A	A	A	A	A	A	A	A	A	A	A	A	A	A	A	A	A	A	J	E			
D	A	A	A	A	A	A	A	A	A	A	A	A	A	A	A	A	A	A	A	A	A	J	D	~~1–5223083–4~~ 9		
C	A	A	A	A	A	A	A	A	A	A	A	A	A	A	A	A	A	A	A	A	A	J	C			
B	A	A	A	A	A	A	A	A	A	A	A	A	A	A	A	A	A	A	A	A	A	J	B			
A	A	A	A	A	A	A	A	A	A	A	A	A	A	A	A	A	A	A	A	A	A	J	A		PART NUMBER	
ROW	1	2	3	4	5	6	7	8	9	10	11	12	13	14	15	16	17	18	19	20	21	22	23	24	ROW	

CONTACT LOAD CHART

E	E	E	E	E	E	E	E	E	E	E	E	E	E	E	E	E	E	E	E	E	E	E	E			
D	E	E	E	E	E	E	E	E	E	E	E	E	E	E	E	E	E	E	E	E	E	E	D	~~2–5223083–0~~ OBSOLETE 8		
C	N	E	E	E	E	E	N	E	E	E	E	E	A	E	E	E	E	E	N	E	E	E	E	C		
B	E	E	E	E	E	E	E	E	E	E	E	E	E	E	E	E	E	E	E	E	E	E	E	B		
A	E	E	E	E	E	E	E	E	E	E	E	E	E	E	E	E	E	E	E	E	E	E	E	A		PART NUMBER
ROW	1	2	3	4	5	6	7	8	9	10	11	12	13	14	15	16	17	18	19	20	21	22	23	24	ROW	

CONTACT LOAD CHART

E	X	–	X	X	X	X	X	X	X	X	X	X	X	X	X	X	X	X	X	X	X	VV	E			
D	X	–	X	X	X	X	X	X	X	X	X	X	X	X	X	X	X	X	X	X	X	VV	D	~~5223083–7~~ 9		
C	–	–	X	X	X	X	X	X	X	X	X	X	X	X	X	X	X	X	X	X	X	VV	C			
B	X	–	X	X	X	X	X	X	X	X	X	X	X	X	X	X	X	X	X	X	X	X	B			
A	X	–	X	X	X	X	X	X	X	X	X	X	X	X	X	X	X	X	X	X	X	X	A		PART NUMBER	
ROW	1	2	3	4	5	6	7	8	9	10	11	12	13	14	15	16	17	18	19	20	21	22	23	24	ROW	

CONTACT LOAD CHART

E	–	A	A	–	–	–	–	–	–	–	–	A	A	–	–	–	–	A	A	–	A	A	E			
D	–	A	A	–	–	–	–	–	–	–	–	A	A	–	–	–	–	–	–	A	A	D	~~1–5223083–5~~ 9			
C	–	–	–	–	–	–	–	–	–	–	–	–	–	–	–	–	–	–	–	A	A	C				
B	–	–	–	A	A	–	A	A	–	A	A	–	–	–	A	A	–	A	A	–	A	A	B			
A	E	E	E	E	E	E	E	E	E	E	E	E	E	E	E	E	E	E	–	E	E	A		PART NUMBER		
ROW	1	2	3	4	5	6	7	8	9	10	11	12	13	14	15	16	17	18	19	20	21	22	23	24	ROW	

CONTACT LOAD CHART

E	A	A	A	A	A	A	A	A	A	A	A	A	A	A	A	A	A	A	A	A	A	A	E			
D	J	A	A	A	A	A	A	A	A	A	J	A	A	A	A	A	A	A	A	A	A	D	~~5223083–8~~ 9			
C	A	A	A	A	A	A	A	A	A	A	A	A	A	A	A	A	A	A	A	A	A	C				
B	J	A	A	A	A	A	A	A	A	A	J	A	A	A	A	A	A	A	A	A	A	B				
A	A	A	A	A	A	A	A	A	A	A	A	A	A	A	A	A	A	A	A	A	A	A		PART NUMBER		
ROW	1	2	3	4	5	6	7	8	9	10	11	12	13	14	15	16	17	18	19	20	21	22	23	24	ROW	

CONTACT LOAD CHART

E	E	–	E	–	–	E	E	E	E	E	E	J	E	E	E	E	E	E	E	E	E	E	E			
D	–	E	–	–	–	J	E	E	E	E	E	J	E	E	E	E	E	E	E	E	E	D	~~1–5223083–6~~ 9			
C	E	–	E	–	–	E	E	E	E	E	E	E	E	E	E	E	E	E	E	E	E	C				
B	–	E	–	–	–	E	E	E	E	E	E	E	E	E	E	E	E	E	E	E	E	B				
A	E	–	E	–	–	E	E	E	E	E	E	E	E	E	E	E	E	E	E	E	E	A		PART NUMBER		
ROW	1	2	3	4	5	6	7	8	9	10	11	12	13	14	15	16	17	18	19	20	21	22	23	24	ROW	

CONTACT LOAD CHART

THIS DRAWING IS A CONTROLLED DOCUMENT.

DIMENSIONS: mm

TOLERANCES UNLESS OTHERWISE SPECIFIED:
0 PLC ± –
1 PLC ± –
2 PLC ± 0.13
3 PLC ± –
4 PLC ± –
ANGLES ± –

MATERIAL

FINISH

DWN	R.MCMASTER	13DEC04
CHK	R.WERTZ	13DEC04
APVD	R.WERTZ	13DEC04
PRODUCT SPEC	—	
APPLICATION SPEC	—	
WEIGHT	—	

TE Connectivity

NAME: PIN ASSY,Z–PACK 2mm FB,SIGNAL VERTICAL 5R,120P SEQUENCED WITH PRESS FIT LEADS

SIZE	CAGE CODE	DRAWING NO	RESTRICTED TO
A1	00779	C–5223083	—

CUSTOMER DRAWING | SCALE 4:1 | SHEET 2 OF 3 | REV E

4805 (1/15)

© – TE Connectivity. All Rights Reserved.

REVISIONS					
P	LTR	DESCRIPTION	DATE	DWN	APVD
	–	SEE SHEET 1	–	–	–

–	–	NO CONTACT	NO CONTACT		
SS	11	8.00	13.60		
A	10	5.00	4.25		
VV	9	8.00	14.90		
Y	8	7.25	13.60		
X	7	6.50	13.60		
J	6	6.50	4.25		
UU	4	5.75	13.60		
T	3	8.00	4.25		
N	2	7.25	4.25		
E	1	5.75	4.25		
CONTACT LETTER	ITEM NUMBER	DIM Y	DIM Z		

E	E	E	E	E	E	E	E	E	E	E	E	E	E	E	E	E	E	E	E	E	E	E	E	E	E
D	N	E	E	E	E	E	E	E	E	E	E	N	E	E	E	E	E	E	E	E	E	E	E	E	D
C	E	E	E	E	E	E	E	E	E	E	E	E	E	E	E	E	E	E	E	E	E	E	E	E	C
B	N	E	E	E	E	E	E	E	E	E	E	N	E	E	E	E	E	E	E	E	E	E	E	E	B
A	E	E	E	E	E	E	E	E	E	E	E	E	E	E	E	E	E	E	E	E	E	E	E	E	A
ROW	1	2	3	4	5	6	7	8	9	10	11	12	13	14	15	16	17	18	19	20	21	22	23	24	ROW

CONTACT LOAD CHART

~~2-5223083-3~~ (9)

PART NUMBER

E	A	A	A	A	A	A	A	E	A	A	E	E	A	A	A	A	E	E	E	E	E	A	E	E	E
D	E	E	E	E	E	E	E	E	E	E	E	E	E	E	E	E	E	E	E	E	E	E	E	E	D
C	E	E	E	E	E	E	E	E	E	E	E	E	E	E	E	E	E	E	E	E	E	E	E	E	C
B	E	E	E	E	E	E	E	E	E	E	E	E	E	E	E	E	E	E	E	E	E	E	E	E	B
A	E	E	E	E	E	E	E	E	E	E	E	E	E	E	E	E	E	E	E	E	E	E	E	E	A
ROW	1	2	3	4	5	6	7	8	9	10	11	12	13	14	15	16	17	18	19	20	21	22	23	24	ROW

CONTACT LOAD CHART

3-5223083-3
OBSOLETE

PART NUMBER

E	E	E	E	E	E	E	E	E	E	E	E	E	E	E	E	E	E	E	E	E	E	E	E	N	E
D	E	E	E	E	E	E	E	E	E	E	E	E	E	E	E	E	E	E	E	E	E	E	E	N	D
C	E	E	E	E	E	E	E	E	E	E	E	E	E	E	E	E	E	E	E	E	E	E	E	E	C
B	E	E	E	E	E	E	E	E	E	E	E	E	E	E	E	E	E	E	E	E	E	E	E	E	B
A	E	E	E	E	E	E	E	E	E	E	E	E	E	E	E	E	E	E	E	E	E	E	E	N	A
ROW	1	2	3	4	5	6	7	8	9	10	11	12	13	14	15	16	17	18	19	20	21	22	23	24	ROW

CONTACT LOAD CHART

~~2-5223083-5~~ (9)

PART NUMBER

E	E	E	E	E	E	E	E	E	E	E	E	E	E	E	E	E	E	E	E	E	E	E	E	E	E
D	N	J	J	N	J	J	N	J	J	N	J	J	N	J	J	N	J	J	N	J	J	J	J	J	D
C	J	J	N	J	J	N	J	J	N	J	J	N	J	J	N	J	J	N	J	J	J	J	J	J	C
B	J	N	J	J	N	J	J	N	J	J	N	J	J	N	J	J	N	J	A	J	J	J	J	J	B
A	E	A	E	E	E	E	E	E	E	E	E	E	E	E	E	E	E	E	E	E	E	E	E	E	A
ROW	1	2	3	4	5	6	7	8	9	10	11	12	13	14	15	16	17	18	19	20	21	22	23	24	ROW

CONTACT LOAD CHART

~~3-5223083-5~~ (9)

PART NUMBER

E	E	E	E	E	E	E	E	E	E	E	E	E	E	E	E	E	E	E	E	E	E	E	E	E	E
D	J	E	E	E	E	E	E	E	E	E	E	E	E	E	E	E	E	E	E	E	E	E	E	E	D
C	E	E	E	E	E	E	E	E	E	E	E	E	E	E	E	E	E	E	E	E	E	E	E	E	C
B	J	E	E	E	E	E	E	E	E	E	E	E	E	E	E	E	E	E	E	E	E	E	E	E	B
A	E	E	E	E	E	E	E	E	E	E	E	E	E	E	E	E	E	E	E	E	E	E	E	E	A
ROW	1	2	3	4	5	6	7	8	9	10	11	12	13	14	15	16	17	18	19	20	21	22	23	24	ROW

CONTACT LOAD CHART

~~2-5223083-6~~ (9)

PART NUMBER

E	–	UU	–	UU	–	UU	–	UU	–	UU	–	UU	–	UU	–	UU	–	UU	–	UU	–	UU	–	UU	E
D	UU	–	UU	–	UU	–	UU	–	UU	–	UU	–	UU	–	UU	–	UU	–	UU	–	UU	–	UU	–	D
C	–	UU	–	UU	–	UU	–	UU	–	UU	–	UU	–	UU	–	UU	–	UU	–	UU	–	UU	–	UU	C
B	UU	–	UU	–	UU	–	UU	–	UU	–	UU	–	UU	–	UU	–	UU	–	UU	–	UU	–	UU	–	B
A	–	UU	–	UU	–	UU	–	UU	–	UU	–	UU	–	UU	–	UU	–	UU	–	UU	–	UU	–	UU	A
ROW	1	2	3	4	5	6	7	8	9	10	11	12	13	14	15	16	17	18	19	20	21	22	23	24	ROW

CONTACT LOAD CHART

3-5223083-6

PART NUMBER

E		E		E		E		E		E		E		E		E	E	E	E	E	E	E	E	E	E
D																		E	E	E	E	E	E	E	D
C	E		E		E		E		E		E		E		E		E	E	E	E	E	E	E	E	C
B																		E	E	E	E	E	E	E	B
A	E		E		E		E		E		E		E		E		E	E	E	E	E	E	E	E	A
ROW	1	2	3	4	5	6	7	8	9	10	11	12	13	14	15	16	17	18	19	20	21	22	23	24	ROW

CONTACT LOAD CHART

2-5223083-7

PART NUMBER

E	–	E	–	E	–	E	–	E	–	E	–	E	–	E	–	E	–	E	–	E	–	E	–	E	E
D	E	–	E	–	E	–	E	–	E	–	E	–	E	–	E	–	E	–	E	–	E	–	E	–	D
C	–	E	–	E	–	E	–	E	–	E	–	E	–	E	–	E	–	E	–	E	–	E	–	E	C
B	E	–	E	–	E	–	E	–	E	–	E	–	E	–	E	–	E	–	E	–	E	–	E	–	B
A	–	E	–	E	–	E	–	E	–	E	–	E	–	E	–	E	–	E	–	E	–	E	–	E	A
ROW	1	2	3	4	5	6	7	8	9	10	11	12	13	14	15	16	17	18	19	20	21	22	23	24	ROW

CONTACT LOAD CHART

3-5223083-7

PART NUMBER

E	UU	UU	UU	UU	UU	UU	UU	UU	UU	UU	UU	UU	UU	UU	UU	UU	UU	UU	UU	UU	UU	UU	UU	UU	E
D	Y	UU	UU	UU	UU	UU	UU	UU	UU	UU	UU	UU	UU	UU	UU	UU	UU	UU	UU	UU	UU	UU	UU	UU	D
C	UU	UU	UU	UU	UU	UU	UU	UU	UU	UU	UU	UU	UU	UU	UU	UU	UU	UU	UU	UU	UU	UU	UU	UU	C
B	UU	Y	UU	UU	UU	UU	UU	UU	UU	UU	UU	UU	UU	UU	UU	UU	UU	UU	UU	UU	UU	UU	UU	UU	B
A	UU	Y	UU	UU	UU	UU	UU	UU	UU	UU	UU	UU	UU	UU	UU	UU	UU	UU	UU	UU	UU	UU	UU	UU	A
ROW	1	2	3	4	5	6	7	8	9	10	11	12	13	14	15	16	17	18	19	20	21	22	23	24	ROW

CONTACT LOAD CHART

2-5223083-9
OBSOLETE

PART NUMBER

E	N	–	–	–	J	J	N	N	J	N	J	N	N	E	E	E	E	E	N	N	N	N	E	E	E
D	N	–	–	–	J	J	N	N	J	N	J	N	N	N	N	E	E	N	E	E	N	E	E	E	D
C	N	–	–	–	J	J	N	N	J	N	J	N	E	E	E	N	E	E	N	E	E	N	E	E	C
B	N	–	–	–	J	J	N	N	J	N	J	N	E	E	E	N	N	E	N	E	E	N	E	E	B
A	N	–	–	–	J	J	N	N	J	N	J	N	E	E	E	N	E	E	N	E	E	N	E	E	A
ROW	1	2	3	4	5	6	7	8	9	10	11	12	13	14	15	16	17	18	19	20	21	22	23	24	ROW

CONTACT LOAD CHART

~~3-5223083-9~~
OBSOLETE

PART NUMBER

E	UU	UU	UU	UU	UU	UU	UU	UU	UU	UU	UU	UU	UU	UU	UU	UU	UU	UU	UU	UU	UU	UU	UU	UU	E
D	UU	UU	UU	UU	UU	UU	UU	UU	UU	UU	UU	UU	UU	UU	UU	UU	UU	UU	UU	UU	UU	UU	UU	UU	D
C	SS	UU	UU	UU	UU	UU	UU	UU	UU	UU	UU	UU	UU	UU	UU	UU	UU	UU	UU	UU	UU	UU	UU	UU	C
B	UU	UU	UU	UU	UU	UU	UU	UU	UU	UU	UU	UU	UU	UU	UU	UU	UU	UU	UU	UU	UU	UU	UU	UU	B
A	UU	UU	UU	UU	UU	UU	UU	UU	UU	UU	UU	UU	UU	UU	UU	UU	UU	UU	UU	UU	UU	UU	UU	UU	A
ROW	1	2	3	4	5	6	7	8	9	10	11	12	13	14	15	16	17	18	19	20	21	22	23	24	ROW

CONTACT LOAD CHART

3-5223083-0
OBSOLETE

PART NUMBER

E	N	N	N	N	J	J	J	J	J	J	J	J	J	J	J	J	J	J	J	J	J	J	J	J	E
D	A	N	N	N	N	N	J	J	J	J	J	J	J	J	J	J	J	J	N	N	N	A	J	D	
C	J	J	N	N	N	N	J	J	J	J	J	J	J	J	J	J	J	J	N	N	N	N	J	C	
B	J	J	J	N	N	N	J	J	J	J	J	J	J	J	J	J	J	J	N	N	N	N	J	B	
A	J	J	J	J	J	J	J	J	J	J	J	J	J	J	J	J	N	J	N	N	J	J	J	A	
ROW	1	2	3	4	5	6	7	8	9	10	11	12	13	14	15	16	17	18	19	20	21	22	23	24	ROW

CONTACT LOAD CHART

4-5223083-8

PART NUMBER

E	E	E	E	E	E	A	T	A	E	E	A	E	E	E	E	E	E	T	T	E	N	N	E	T	E
D	E	E	E	E	E	E	E	E	E	E	E	E	E	E	E	E	E	T	T	E	N	N	E	T	D
C	E	E	E	E	E	E	E	E	E	E	E	E	E	E	E	E	E	T	T	E	N	N	E	T	C
B	E	E	E	E	E	E	E	E	E	E	E	E	E	E	E	E	E	T	T	E	N	N	E	T	B
A	E	E	E	E	E	A	E	A	E	E	E	E	E	E	E	E	E	T	T	E	N	N	E	T	A
ROW	1	2	3	4	5	6	7	8	9	10	11	12	13	14	15	16	17	18	19	20	21	22	23	24	ROW

CONTACT LOAD CHART

3-5223083-1
OBSOLETE

PART NUMBER

E	E	–	E	–	E	–	E	–	E	–	E	–	E	–	E	–	E	–	E	–	E	–	E	–	E
D	–	E	–	E	–	E	–	E	–	E	–	E	–	E	–	E	–	E	–	E	–	E	–	E	D
C	E	–	E	–	E	–	E	–	E	–	E	–	E	–	E	–	E	–	E	–	E	–	E	–	C
B	–	E	–	E	–	E	–	E	–	E	–	E	–	E	–	E	–	E	–	E	–	E	–	E	B
A	E	–	E	–	E	–	E	–	E	–	E	–	E	–	E	–	E	–	E	–	E	–	E	–	A
ROW	1	2	3	4	5	6	7	8	9	10	11	12	13	14	15	16	17	18	19	20	21	22	23	24	ROW

CONTACT LOAD CHART

4-5223083-9

PART NUMBER

E	E	E	E	E	E	E	E	E	E	E	E	E	E	E	E	E	E	E	E	E	E	E	E	E	E
D	E	E	E	E	E	E	E	E	E	E	E	E	E	E	E	E	E	E	E	E	E	E	E	E	D
C	T	E	E	E	E	E	E	E	E	E	E	E	E	E	E	E	E	E	E	E	E	E	E	E	C
B	E	E	E	E	E	E	E	E	E	E	E	E	E	E	E	E	E	E	E	E	E	E	E	E	B
A	E	E	E	E	E	E	E	E	E	E	E	E	E	E	E	E	E	E	E	E	E	E	E	E	A
ROW	1	2	3	4	5	6	7	8	9	10	11	12	13	14	15	16	17	18	19	20	21	22	23	24	ROW

CONTACT LOAD CHART

3-5223083-2
OBSOLETE

PART NUMBER

E	A	A	A	A	A	A	A	A	A	A	A	A	A	A	A	A	A	A	A	A	A	A	A	A	E
D	A	A	A	A	A	A	A	A	A	A	A	A	A	A	A	A	A	A	A	A	A	A	A	A	D
C	T	T	T	T	T	T	T	T	T	T	T	T	T	T	T	T	T	T	T	T	T	T	T	T	C
B	A	A	A	A	A	A	A	A	A	A	A	A	A	A	A	A	A	A	A	A	A	A	A	A	B
A	A	A	A	A	A	A	A	A	A	A	A	A	A	A	A	A	A	A	A	A	A	A	A	A	A
ROW	1	2	3	4	5	6	7	8	9	10	11	12	13	14	15	16	17	18	19	20	21	22	23	24	ROW

CONTACT LOAD CHART

4-5223083-5

PART NUMBER

THIS DRAWING IS A CONTROLLED DOCUMENT.

DIMENSIONS: mm

TOLERANCES UNLESS OTHERWISE SPECIFIED:
0 PLC ± –
1 PLC ± –
2 PLC ± 0.13
3 PLC ± –
4 PLC ± –
ANGLES ± –

MATERIAL

FINISH

DWN B.MCMASTER 13DEC04
CHK R.WERTZ 13DEC04
APVD R.WERTZ 13DEC04

PRODUCT SPEC –

APPLICATION SPEC –

WEIGHT –

TE Connectivity

NAME
PIN ASSY,Z-PACK 2mm FB,SIGNAL
VERTICAL 5R,120P
SEQUENCED WITH PRESS FIT LEADS

SIZE	CAGE CODE	DRAWING NO	RESTRICTED TO
A1	00779	C-5223083	–

CUSTOMER DRAWING

SCALE	SHEET	REV
4:1	3 OF 3	E

4805 (1/15)