THIS DRAWING IS UNPUBLISHED. RELEASED FOR PUBLICATION -,- .
© COPYRIGHT - By - ALL RIGHTS RESERVED.

LOC	DIST
GP	00

REVISIONS

P	LTR	DESCRIPTION	DATE	DWN	APVD
	R1	REVISED PER ECN-25-320218	13JUN2025	M.S	J.M

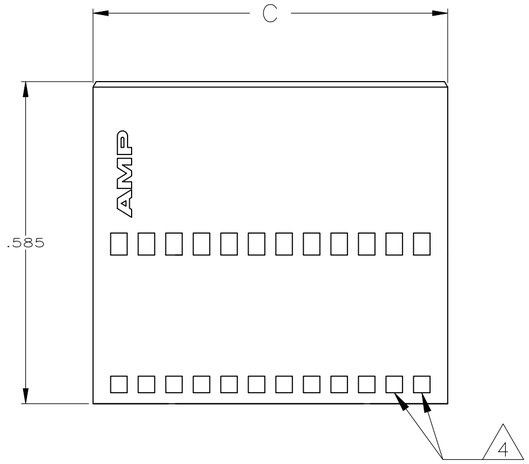

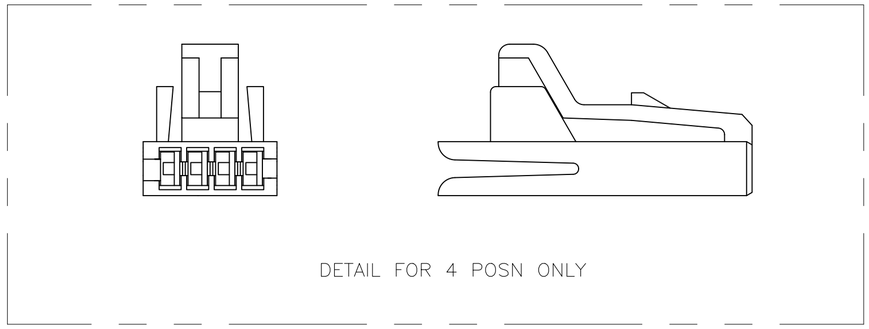

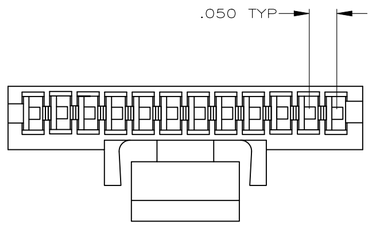

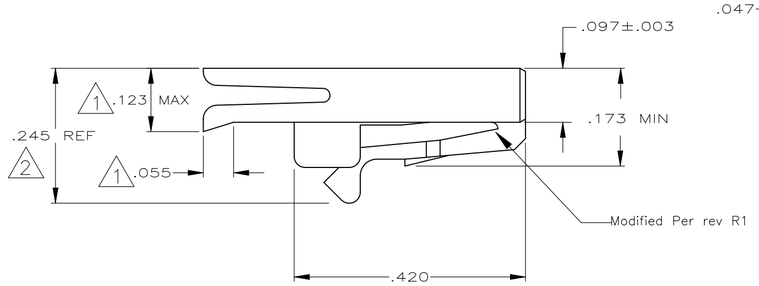

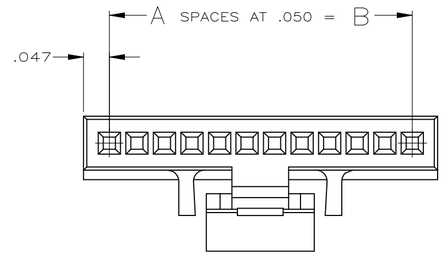

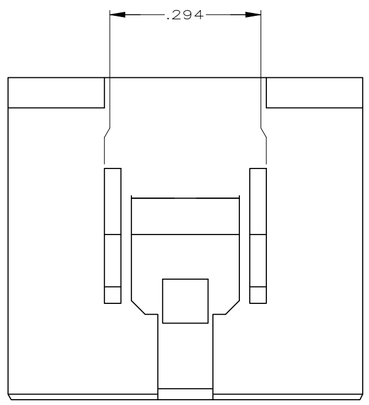

	2.543	2.450	49	50	4-487545-7
	2.293	2.200	44	45	4-487545-2
	2.043	1.950	39	40	3-487545-7
	1.843	1.750	35	36	3-487545-3
	1.543	1.450	29	30	2-487545-7
3 OBSOLETE	~~1.443~~	~~1.350~~	~~27~~	~~28~~	~~2-487545-5~~
3 OBSOLETE	~~1.343~~	~~1.250~~	~~25~~	~~26~~	~~2-487545-3~~
	1.293	1.200	24	25	2-487545-2
	1.143	1.050	21	22	1-487545-9
	1.043	.950	19	20	1-487545-7
	.893	.800	16	17	1-487545-4
	.793	.700	14	15	1-487545-2
	.693	.600	12	13	1-487545-0
	.643	.550	11	12	487545-9
	.543	.450	9	10	487545-7
	.443	.350	7	8	487545-5
	.393	.300	6	7	487545-4
	.343	.250	5	6	487545-3
	.293	.200	4	5	487545-2
	.243	.150	3	4	487545-1
	C	B	A	POSN	PART NO.

1. LIP DOES NOT APPLY TO 4 & 5 POSITION HOUSINGS.
2. THIS DIMENSION IS .275 REF. ON 4 POSITION HOUSING ONLY.
3. OBSOLETE PARTS: OBSOLETE CIS STREAMLINING PER D.RENAUD/D.SINISI.
4. WINDOWS MAY OR MAY NOT BE PRESENT ON THIS END OF THE HOUSING.

THIS DRAWING IS A CONTROLLED DOCUMENT.

DIMENSIONS: INCHES

TOLERANCES UNLESS OTHERWISE SPECIFIED:
0 PLC ± -
1 PLC ± -
2 PLC ± -
3 PLC ± .005
4 PLC ± -
ANGLES ± -

MATERIAL: POLYESTER, BLACK
FINISH: -

DWN B. HAYMAKER 24MAY99
CHK S. BOLASH 24MAY99
APVD S. BOLASH 24MAY99
PRODUCT SPEC —
APPLICATION SPEC —
WEIGHT —

TE Connectivity

NAME: HOUSING, RECEPTACLE, .050 C/L
—

SIZE	CAGE CODE	DRAWING NO	RESTRICTED TO
A2	00779	C-487545	—

CUSTOMER DRAWING | SCALE 5:1 | SHEET 1 OF 1 | REV R1

487545