THIS DRAWING IS UNPUBLISHED. RELEASED FOR PUBLICATION -,- .
© COPYRIGHT - By - ALL RIGHTS RESERVED.

LOC	DIST
DF	DO

REVISIONS

P	LTR	DESCRIPTION	DATE	DWN	APVD
	D	REVISED PER ECO-15-005922	27-May-15	MGM	CT

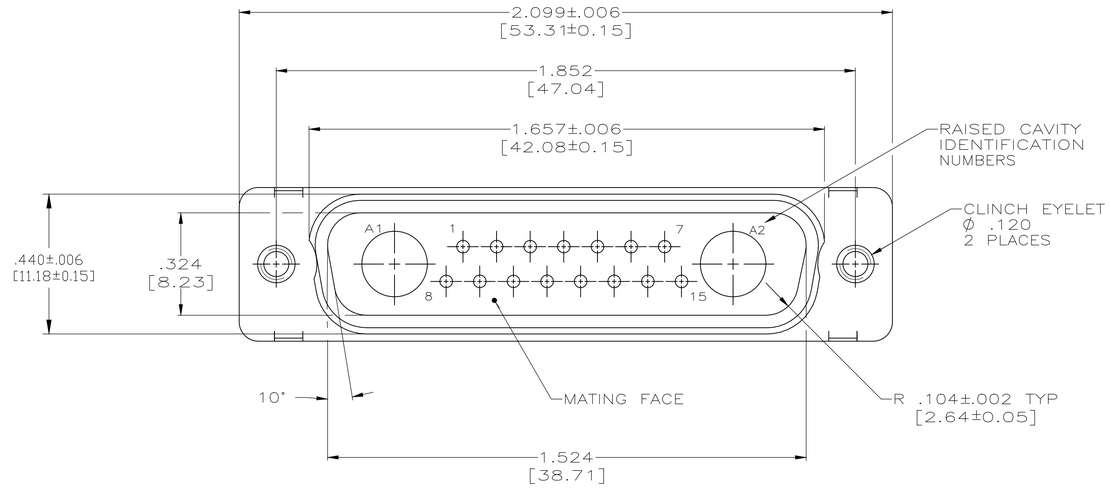

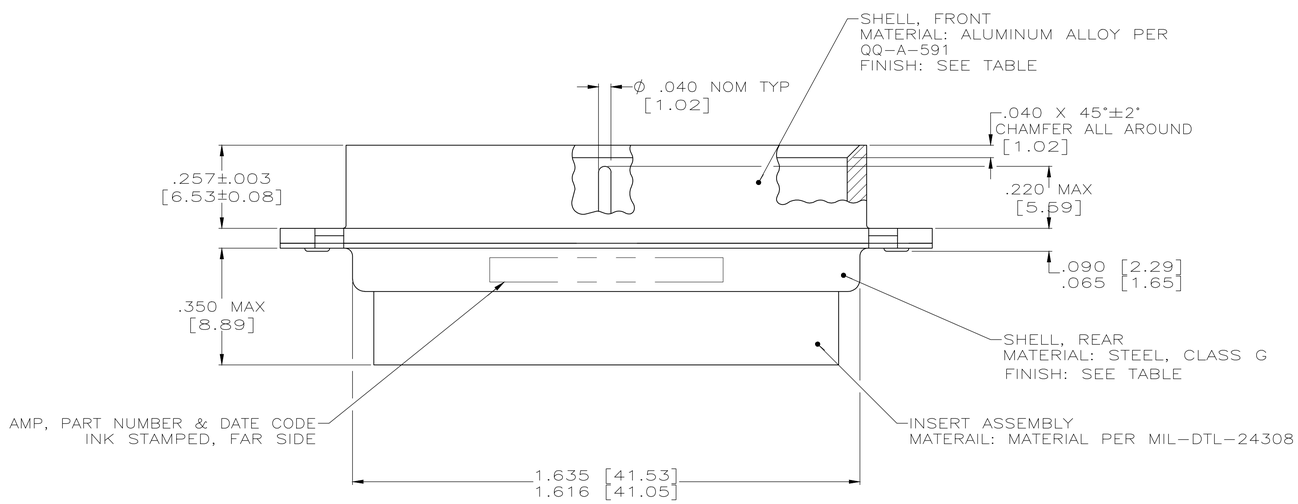

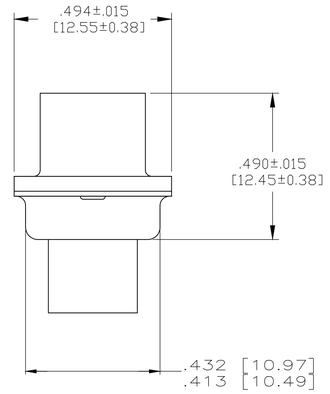

1. THIS PLUG WILL MATE WITH ANY 17C2, SIZE 3 RECEPTACLE IN AMPLIMITE SERIES.
2. MAXIMUM WIRE INSULATION TO BE USED WITH THIS PLUG IS .068 DIA.
3. STAINLESS STEEL RETENTION CLIPS (15) ARE INCLUDED IN INSERT ASSEMBLY.
4. THIS PLUG IS DESIGNED TO CONFORM TO THE LATEST ISSUE OF MIL-C-24308.
5. THIS CONNECTOR ACCEPTS SIZE 20 PIN SIGNAL CONTACTS, PURCHASED SEPARATELY.
6. USE 2 SIZE 8 POWER OR COAX PIN CONTACTS, PURCHASED SEPARATELY.
7. SEE AMP CATALOGS 79-547 AND 74-286 FOR CONTACTS.
8. FINISH: CADMIUM PER QQ-P-416; YELLOW CHROMATE.
9. FINISH: ZINC PLATED PER ASTM-B-633 .000200 MIN THK WITH SUPPLEMENTARY CHROMATE (Cr3+).

FINISH	PART NO.
9	5-447724-1
8	447724-1

THIS DRAWING IS A CONTROLLED DOCUMENT. –

DIMENSIONS: INCHES [MM]

TOLERANCES UNLESS OTHERWISE SPECIFIED:
0 PLC ± –
1 PLC ± –
2 PLC ± –
3 PLC ± .005 [0.13]
4 PLC ± –
ANGLES ± –

MATERIAL: SEE CALLOUTS
FINISH: SEE CALLOUTS

DWN 27-May-15 MANJUNATH G M
CHK 27-May-15 CHARLES THOMAS
APVD 27-May-15 CHARLES THOMAS
PRODUCT SPEC –
APPLICATION SPEC –
WEIGHT –

CUSTOMER DRAWING

TE Connectivity

NAME: PLUG ASSEMBLY,AMPLIMITE BLINDMATE 17C2,SIZE 3,SERIES 109

SIZE	CAGE CODE	DRAWING NO	RESTRICTED TO
A1	00779	C-447724	–

SCALE	SHEET	REV
4:1	1 OF 1	D

4805 (3/11)