THIS DRAWING IS UNPUBLISHED. RELEASED FOR PUBLICATION 20
© COPYRIGHT 20 BY - ALL RIGHTS RESERVED.

LEVIER ET VERROU SECONDAIRE EN POSITION VERROUILLES
LEVER AND SECONDARY LOCK IN LOCKED POSITION

COUPE C-C
SECTION C-C

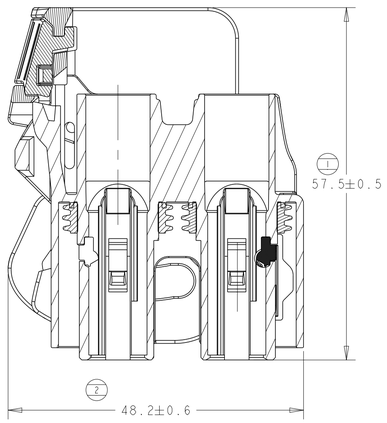

COUPE A3-A3
SECTION A3-A3

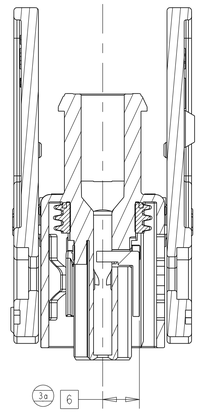

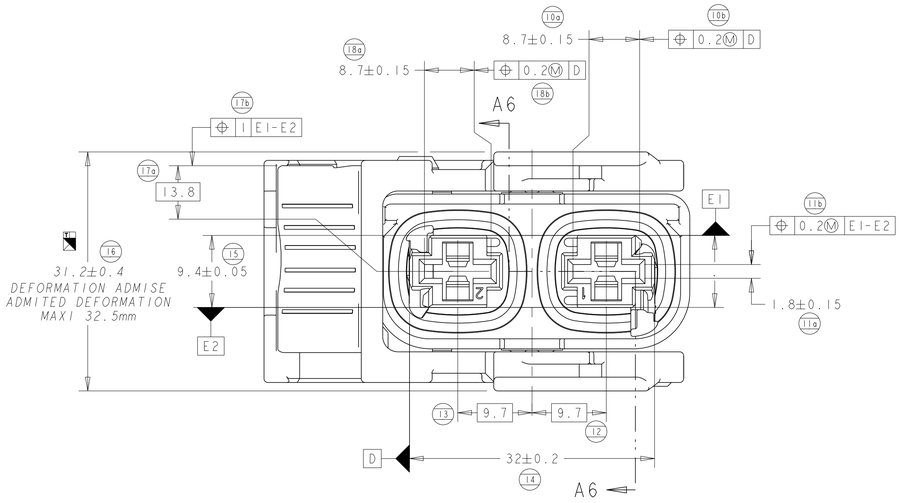

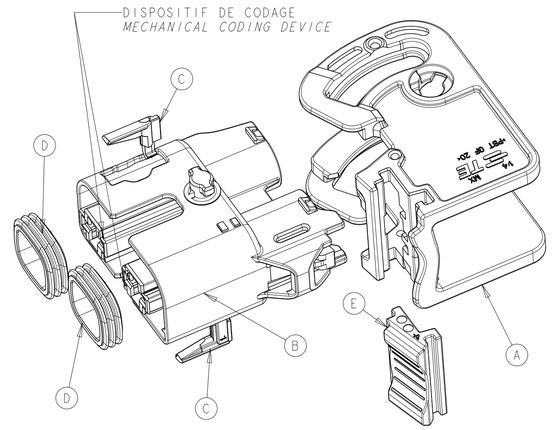

ECHELLE 3:2

COUPE A1-A1
SECTION A1-A1

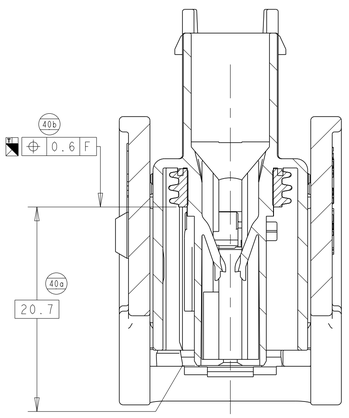

COUPE A6-A6
SECTION A6-A6

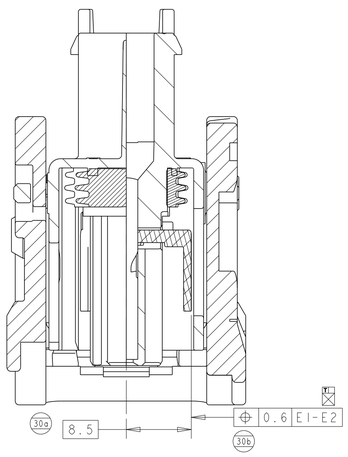

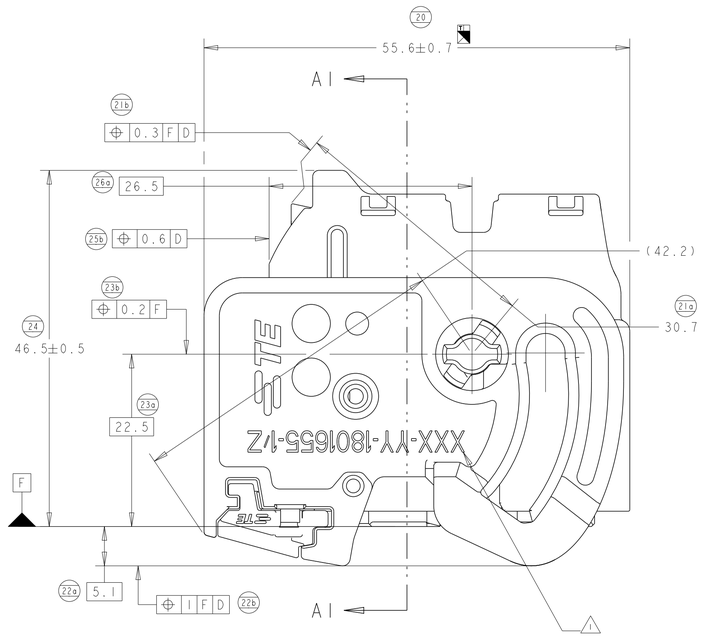

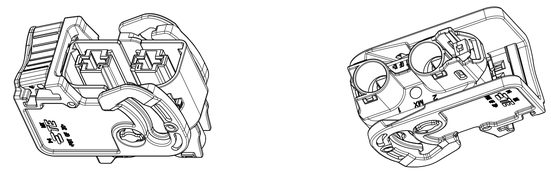

ECHELLE 1:1

POSITION DE LIVRAISON

DELIVERY POSITION

REVISIONS						
P	LTR	DESCRIPTION	DATE	DWN	APVD
	A	INITIAL RELEASE	10MAR2014	CS	JPP
	B	CHANGEMENT DE MATIERE DU CPA-PA6 GF30%	18SEP2014	PB	JPP
	C	ERREUR REPRESENTATION DES CONTACTS	03MAR2015	PB	JD
	D	AJOUT D'UNE LIGNE DE CONDITIONNEMENT	15NOV2015	PB	XR

COMPOSANTS / *COMPONENTS*

	DESCRIPTION	DESIGNATION	MATIERE *MATERIAL*	COULEUR *COLOR*	NOMBRE *QUANTITY*
A	*LEVER*	LEVIER	PBT 20% GF HB	NATUREL *NATURAL*	1
B	*RECEPTACLE HOUSING*	PORTE CLIPS	PBT 10% GF V0	NOIR/BLEU/MARRON/VERT/VIOLET *BLACK/BLUE/BROWN/GREEN/PURPLE*	1
C	*SECONDARY LOCK*	VERROU SECONDAIRE	PA 66 30% GF V0	JAUNE *YELLOW*	2
D	*INTERFACIAL SEAL*	JOINT INTERFACIAL	SILICON	ORANGE *ORANGE*	2
E	*CPA*	CPA	PA 30% GF HB	ROUGE *RED*	1

NOTE / *NOTE*		
N° / *Nº*	DESIGNATION	*DESCRIPTION*
1	MARQUAGE JET D'ENCRE JOUR / ANNEE / PN TE / INDICE D'ASSEMBLAGE	*INK JET MARK* *DAY / YEAR / TE PN / CODE OF ASSEMBLY*

PRESTATIONS / *SERVICES*		
T2	CLASSE DE TEMPERATURE	*TEMPERATURE CLASS*
V1	CLASSE DE VIBRATION	*VIBRATION CLASS*
E2	CLASSE D'ETANCHEITE	*SEALING CLASS*
IPX9K	JET HAUTE PRESSION	*HIGHT PRESSURE TEST*

REFERENCES TE POUR CABLEURS *TE PART NUMBERS FOR HARNESS MAKERS*			
COMPOSANTS *COMPONENTS*	TE *REFERENCES*	MATIERE *MATERIAL*	COULEUR *COLOR*
CLIP / RECEPTACLE 8MM NG1+ SECTION 2.5 A 4 MM2 *WIRE SECTION FROM 2.5 TO 4 MM2*	1544964-1	CUIVRE MICRO ALLIE + SnAg *MICRO ALLOY COPPER + SnAg*	/
CLIP / RECEPTACLE 8MM NG1+ SECTION 5 A 6 MM2 *WIRE SECTION FROM 5 TO 6 MM2*	1544965-1	CUIVRE MICRO ALLIE + SnAg *MICRO ALLOY COPPER + SnAg*	/
CLIP / RECEPTACLE 8MM NG1+ SECTION 7 A 10 MM2 *WIRE SECTION FROM 7 TO 10 MM2*	1544966-1	CUIVRE MICRO ALLIE + SnAg MICRO ALLOY COPPER	/
CLIP / RECEPTACLE 8MM NG1+ SECTION 2.5 A 4 MM2 *WIRE SECTION FROM 2.5 TO 4 MM2*	1544964-2	CUIVRE MICRO ALLIE + Ag *MICRO ALLOY COPPER + Ag*	/
CLIP / RECEPTACLE 8MM NG1+ SECTION 5 A 6 MM2 *WIRE SECTION FROM 5 TO 6 MM2*	1544965-2	CUIVRE MICRO ALLIE + Ag *MICRO ALLOY COPPER + Ag*	/
CLIP / RECEPTACLE 8MM NG1+ SECTION 7 A 10 MM2 *WIRE SECTION FROM 7 TO 10 MM*	1544966-2	CUIVRE MICRO ALLIE + Ag *MICRO ALLOY COPPER + Ag*	/
JOINT NG9K A SERTIR 2.5 A 5 MM2 *NG9K SEAL 2.5 TO 5 MM2* DIAMETRE FIL 2.65 A 4 mm *WIRE DIAMETER FROM 2.65 TO 4 mm*	1544970-1	MVQ 50 Sh A AUTOLUBRIFIE *MVQ 50 Sh A SELF-LUBRICATING*	MARRON *BROWN*
JOINT NG9K A SERTIR 6 A 7 MM2 *NG9K SEAL 6 TO 7 MM2* DIAMETRE FIL 4.1 A 5 MM *WIRE DIAMETER FROM 4.1 TO 5 MM*	1544970-2	MVQ 50 Sh A AUTOLUBRIFIE *MVQ 50 Sh A SELF-LUBRICATING*	BLEU *BLUE*
JOINT NG9K A SERTIR 10 MM2 *NG9K SEAL 10 MM2* DIAMETRE FIL 4.3 A 6 MM *WIRE DIAMETER FROM 4.3 TO 6 MM*	1544970-3	MVQ 50 Sh A AUTOLUBRIFIE *MVQ 50 Sh A SELF-LUBRICATING*	JAUNE *YELLOW*
BOUCHON NG9K *NG9K PLUG*	1544970-4	MVQ 50 Sh A NON-LUBRIFIE *MVQ 50 Sh A NO-LUBRICATING*	BLANC *WHITE*

CODAGE *KEYCODE*	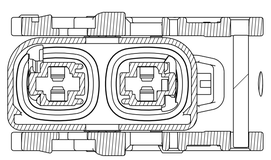	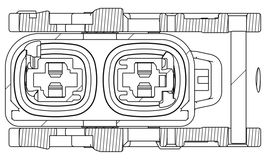	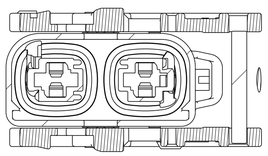	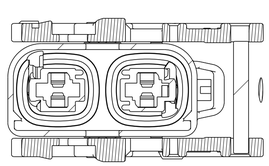	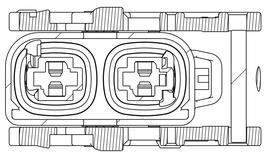
TE PN CONDITIONNEMENT EN VRAC *TE PN PACKAGING BULK*	1801655-1	1801655-2	1801655-3	1801655-4	1801655-5
TE PN CONDITIONNEMENT EN PLATEAUX *TE PN PACKAGING TRAYS*	1-1801655-1	1-1801655-2 NON OUTILLÉ *NOT TOOLED*	1-1801655-3	1-1801655-4 NON OUTILLÉ *NOT TOOLED*	1-1801655-5 NON OUTILLÉ *NOT TOOLED*
COULEUR / *COLOR*	NOIR / *BLACK*	BLEU / *BLUE*	MARRON / *BROWN*	VERT / *GREEN*	VIOLET / *PURPLE*

THIS DRAWING IS A CONTROLLED DOCUMENT.

DIMENSIONS: mm

TOLERANCES UNLESS OTHERWISE SPECIFIED:
0 PLC ±
1 PLC ±
2 PLC ± 0.2
3 PLC ±
4 PLC ±
ANGLES ±3°

MATERIAL: VOIR NOTES / SEE NOTES
FINISH: - / -

DWN	C SALGADO	10MAR2014
CHK	JP PICAUD	11MAR2014
APVD	J DAHER	11MAR2014
PRODUCT SPEC	108-15390	
APPLICATION SPEC	411-15746	
WEIGHT	0.026kg	

TE Connectivity

NAME: INSULATED 2 WAYS, 8MM RECEPTACLE HOUSING ASSY, CPA

SIZE	CAGE CODE	DRAWING NO	RESTRICTED TO
A1	-	C-1801655	-

Customer Drawing | SCALE 2:1 | SHEET 1 OF 1 | REV D

4805 (3/13)