THIS DRAWING IS UNPUBLISHED. RELEASED FOR PUBLICATION -,- .
© COPYRIGHT - BY TYCO ELECTRONICS CORPORATION. ALL RIGHTS RESERVED.

LOC	DIST
GP	00

REVISIONS

P	LTR	DESCRIPTION	DATE	DWN	APVD
	B1	REVISED AS PER ECR-25-233445	28JAN2025	MK	MS

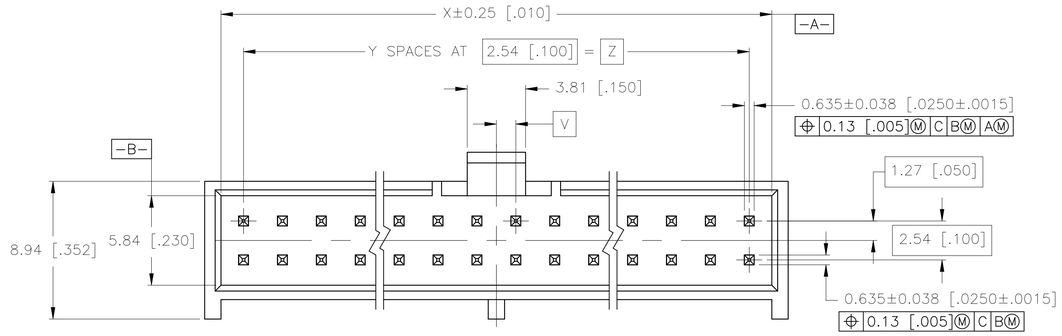

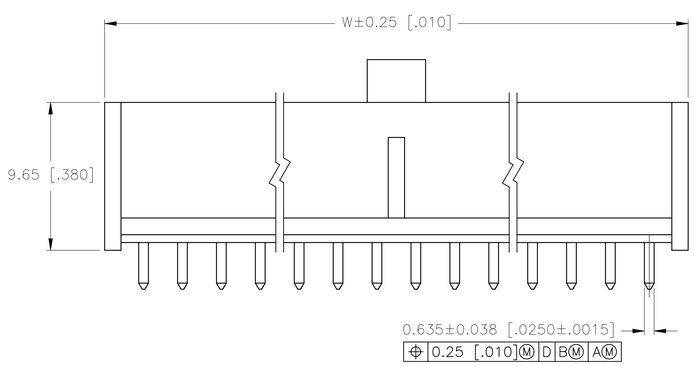

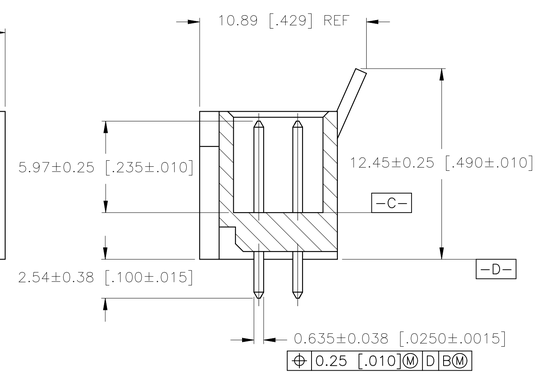

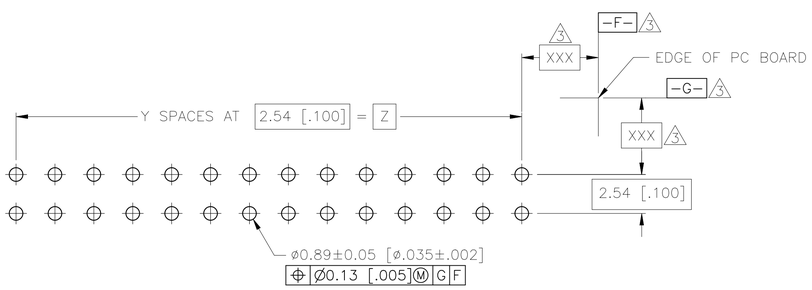

RECOMMENDED PC BOARD LAYOUT
1.57[.062] PC BOARD
(VIEWED FROM CONNECTOR SIDE)

1. HOUSING: NYLON, 94V-0 RATED, COLOR BLUE.
   CONTACTS: PHOSPHOR BRONZE.
2. CONTACTS: 0.00254 [.000100] MIN TIN OVER 0.00127 [.000050] MIN NICKEL.
3. DATUMS AND BASIC DIMENSIONS TO BE ESTABLISHED BY CUSTOMER.
4. CONTACTS: 0.00076 [.000030] MIN GOLD IN CONTACT AREA. 0.00254 [.000100] MIN TIN ON SOLDER POST, ALL OVER 0.00127 [.000050] MIN NICKEL.

FINISH	Z	Y	X	W	V	NO OF POS	PART NUMBER
2	78.74 [3.100]	31	81.69 [3.216]	83.82 [3.300]	1.27 [.050]	64	5-1658549-8
4	78.74 [3.100]	31	81.69 [3.216]	83.82 [3.300]	1.27 [.050]	64	5-1658549-7
2	76.20 [3.000]	30	79.15 [3.116]	81.28 [3.200]	0.00 [.000]	62	5-1658549-6
4	76.20 [3.000]	30	79.15 [3.116]	81.28 [3.200]	0.00 [.000]	62	5-1658549-5
2	73.66 [2.900]	29	76.61 [3.016]	78.74 [3.100]	1.27 [.050]	60	5-1658549-4
4	73.66 [2.900]	29	76.61 [3.016]	78.74 [3.100]	1.27 [.050]	60	5-1658549-3
2	71.12 [2.800]	28	74.07 [2.916]	76.20 [3.000]	0.00 [.000]	58	5-1658549-2
4	71.12 [2.800]	28	74.07 [2.916]	76.20 [3.000]	0.00 [.000]	58	5-1658549-1
2	68.58 [2.700]	27	71.53 [2.816]	73.66 [2.900]	1.27 [.050]	56	5-1658549-0
4	68.58 [2.700]	27	71.53 [2.816]	73.66 [2.900]	1.27 [.050]	56	4-1658549-9
2	66.04 [2.600]	26	68.99 [2.716]	71.12 [2.800]	0.00 [.000]	54	4-1658549-8
4	66.04 [2.600]	26	68.99 [2.716]	71.12 [2.800]	0.00 [.000]	54	4-1658549-7
2	63.50 [2.500]	25	66.45 [2.616]	68.58 [2.700]	1.27 [.050]	52	4-1658549-6
4	63.50 [2.500]	25	66.45 [2.616]	68.58 [2.700]	1.27 [.050]	52	4-1658549-5
2	60.96 [2.400]	24	63.91 [2.516]	66.04 [2.600]	0.00 [.000]	50	4-1658549-4
4	60.96 [2.400]	24	63.91 [2.516]	66.04 [2.600]	0.00 [.000]	50	4-1658549-3
2	58.42 [2.300]	23	61.37 [2.416]	63.50 [2.500]	1.27 [.050]	48	4-1658549-2
4	58.42 [2.300]	23	61.37 [2.416]	63.50 [2.500]	1.27 [.050]	48	4-1658549-1
2	55.88 [2.200]	22	58.83 [2.316]	60.96 [2.400]	0.00 [.000]	46	4-1658549-0
4	55.88 [2.200]	22	58.83 [2.316]	60.96 [2.400]	0.00 [.000]	46	3-1658549-9
2	53.34 [2.100]	21	56.29 [2.216]	58.42 [2.300]	1.27 [.050]	44	3-1658549-8
4	53.34 [2.100]	21	56.29 [2.216]	58.42 [2.300]	1.27 [.050]	44	3-1658549-7
2	50.80 [2.000]	20	53.75 [2.116]	55.88 [2.200]	0.00 [.000]	42	3-1658549-6
4	50.80 [2.000]	20	53.75 [2.116]	55.88 [2.200]	0.00 [.000]	42	3-1658549-5
2	45.72 [1.800]	18	48.67 [1.916]	50.80 [2.000]	0.00 [.000]	38	3-1658549-4
4	45.72 [1.800]	18	48.67 [1.916]	50.80 [2.000]	0.00 [.000]	38	3-1658549-3
2	43.18 [1.700]	17	46.13 [1.816]	48.26 [1.900]	1.27 [.050]	36	3-1658549-2
4	43.18 [1.700]	17	46.13 [1.816]	48.26 [1.900]	1.27 [.050]	36	3-1658549-1
2	40.64 [1.600]	16	43.59 [1.716]	45.72 [1.800]	0.00 [.000]	34	3-1658549-0
4	40.64 [1.600]	16	43.59 [1.716]	45.72 [1.800]	0.00 [.000]	34	2-1658549-9
2	38.10 [1.500]	15	41.05 [1.616]	43.18 [1.700]	1.27 [.050]	32	2-1658549-8
4	38.10 [1.500]	15	41.05 [1.616]	43.18 [1.700]	1.27 [.050]	32	2-1658549-7
2	35.56 [1.400]	14	38.51 [1.516]	40.64 [1.600]	0.00 [.000]	30	2-1658549-6
4	35.56 [1.400]	14	38.51 [1.516]	40.64 [1.600]	0.00 [.000]	30	2-1658549-5
2	33.02 [1.300]	13	35.97 [1.416]	38.10 [1.500]	1.27 [.050]	28	2-1658549-4
4	33.02 [1.300]	13	35.97 [1.416]	38.10 [1.500]	1.27 [.050]	28	2-1658549-3
2	30.48 [1.200]	12	33.43 [1.316]	35.56 [1.400]	0.00 [.000]	26	2-1658549-2
4	30.48 [1.200]	12	33.43 [1.316]	35.56 [1.400]	0.00 [.000]	26	2-1658549-1
2	27.94 [1.100]	11	30.89 [1.216]	33.02 [1.300]	1.27 [.050]	24	2-1658549-0
4	27.94 [1.100]	11	30.89 [1.216]	33.02 [1.300]	1.27 [.050]	24	1-1658549-9
2	25.40 [1.000]	10	28.35 [1.116]	30.48 [1.200]	0.00 [.000]	22	1-1658549-8
4	25.40 [1.000]	10	28.35 [1.116]	30.48 [1.200]	0.00 [.000]	22	1-1658549-7
2	22.86 [0.900]	9	25.81 [1.016]	27.94 [1.100]	1.27 [.050]	20	1-1658549-6
4	22.86 [0.900]	9	25.81 [1.016]	27.94 [1.100]	1.27 [.050]	20	1-1658549-5
2	20.32 [0.800]	8	23.27 [0.916]	25.40 [1.000]	0.00 [.000]	18	1-1658549-4
4	20.32 [0.800]	8	23.27 [0.916]	25.40 [1.000]	0.00 [.000]	18	1-1658549-3
2	17.78 [0.700]	7	20.73 [0.816]	22.86 [0.900]	1.27 [.050]	16	1-1658549-2
4	17.78 [0.700]	7	20.73 [0.816]	22.86 [0.900]	1.27 [.050]	16	1-1658549-1
2	15.24 [0.600]	6	18.19 [0.716]	20.32 [0.800]	0.00 [.000]	14	1-1658549-0
4	15.24 [0.600]	6	18.19 [0.716]	20.32 [0.800]	0.00 [.000]	14	1658549-9
2	12.70 [0.500]	5	15.65 [0.616]	17.78 [0.700]	1.27 [.050]	12	1658549-8
4	12.70 [0.500]	5	15.65 [0.616]	17.78 [0.700]	1.27 [.050]	12	1658549-7
2	10.16 [0.400]	4	13.11 [0.516]	15.24 [0.600]	0.00 [.000]	10	1658549-6
4	10.16 [0.400]	4	13.11 [0.516]	15.24 [0.600]	0.00 [.000]	10	1658549-5
2	7.62 [0.300]	3	10.57 [0.416]	12.70 [0.500]	1.27 [.050]	8	1658549-4
4	7.62 [0.300]	3	10.57 [0.416]	12.70 [0.500]	1.27 [.050]	8	1658549-3
4	48.26 [1.900]	19	56.21 [2.016]	53.34 [2.100]	1.27 [.050]	40	1658549-2
2	48.26 [1.900]	19	56.21 [2.016]	53.34 [2.100]	1.27 [.050]	40	1658549-1

THIS DRAWING IS A CONTROLLED DOCUMENT.

DIMENSIONS: mm [INCHES]

TOLERANCES, UNLESS OTHERWISE SPECIFIED:
0 PLC ± -
1 PLC ± -
2 PLC ± 0.13[.005]
3 PLC ± -
4 PLC ± -
ANGLES ± -

MATERIAL 1

FINISH SEE TABLE

DWN J.GERACE 17OCT03
CHK S.BOLASH 17OCT03
APVD M.WALMSLEY 17OCT03

PRODUCT SPEC -

APPLICATION SPEC -

WEIGHT -

Tyco Electronics
Tyco Electronics Corporation
Harrisburg, PA 17105-3608

NAME HEADER ASSY, VERTICAL, DOUBLE ROW, FLEXPAC

SIZE A1 | CAGE CODE 00779 | DRAWING NO C-1658549 | RESTRICTED TO -

CUSTOMER DRAWING | SCALE 5:1 | SHEET 1 OF 1 | REV B1