© – TE Connectivity. All Rights Reserved.

REVISIONS					
P	LTR	DESCRIPTION	DATE	DWN	APVD
	G1	REVISED AS PER ECR-23-194055	01APR2025	MK	GC

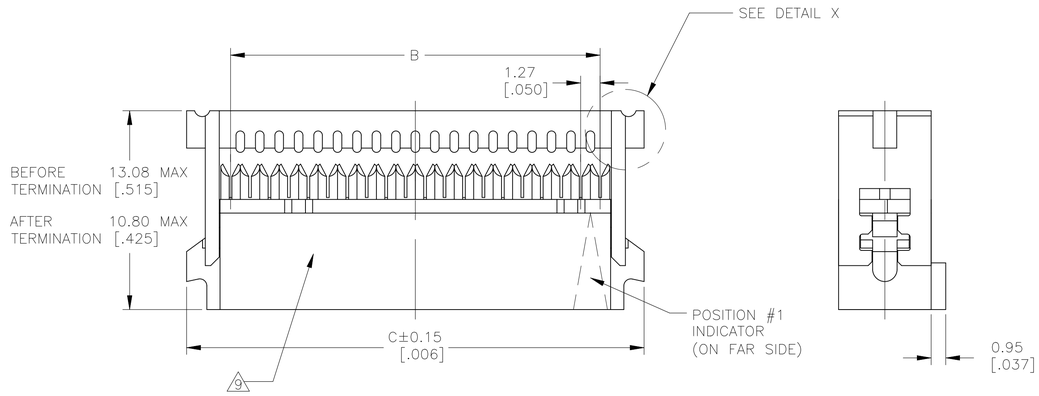

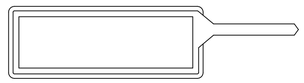

POLARIZING KEY
TE CONNECTIVITY PART NUMBER: 1-1437023-2
T&B PART NUMBER (REF): 609-0000
PURCHASE SEPARATELY

1. 20 POSITION CONNECTOR ASSEMBLY SHOWN.
2. MOLDED PARTS: THERMOPLASTIC, UL94V-0 RATED, COLOR BLUE. CONTACTS: BERYLLIUM COPPER.
3. CONTACTS: 0.00076[.000030] MIN GOLD ON MATING AREA, 0.00254-0.00508[.000100-.000200] TIN ON TERMINATION END, ALL OVER 0.00127[.000050] MIN NICKEL ON ENTIRE CONTACT.
4. CONTACTS: 0.00127[.000050] MIN GOLD ON MATING AREA, 0.00254-0.00508[.000100-.000200] TIN ON TERMINATION END, ALL OVER 0.00127[.000050] MIN NICKEL ON ENTIRE CONTACT.
5. POLARIZER FEATURE DOES NOT EXIST ON POSITION #1 END FOR 14 POSITION AND SMALLER ASSEMBLIES.
6. POLARIZER FEATURE DOES NOT EXIST ON THIS END FOR 6 POSITION ASSEMBLY.
7. FOR TERMINATION OF 28 OR 30 AWG STRANDED PVC INSULATED FLAT RIBBON CABLE.
8. STRAIN RELIEF PACKAGED SEPARATELY AND SHIPPED WITH ASSEMBLY.
9. DATE CODE STAMPED ON THIS SIDE OF CONNECTOR. 6 POSITION CONNECTORS EXCLUDED.
10. ALTERNATE COVER END APPLES TO INDICATED NUMBERS.

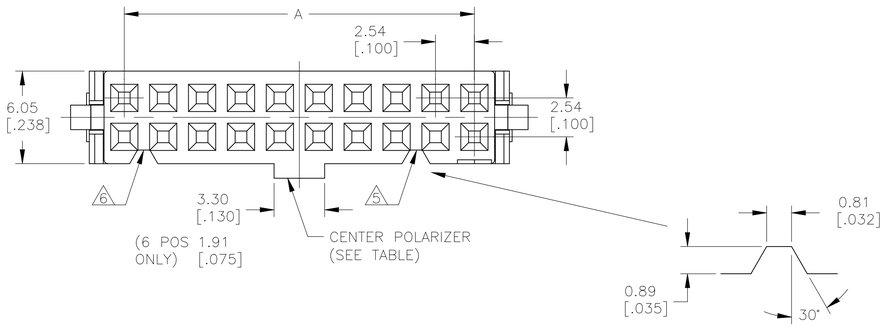

DETAIL X
SCALE 5:1

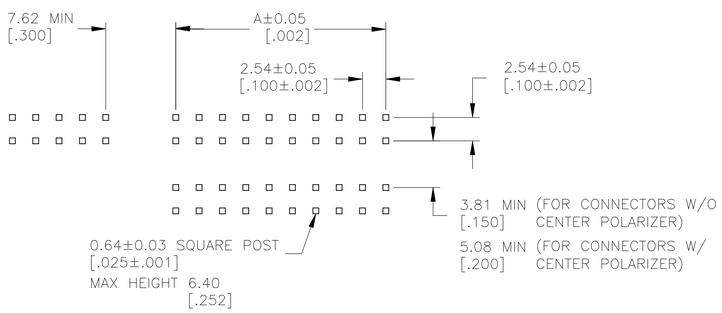

POST LAYOUT

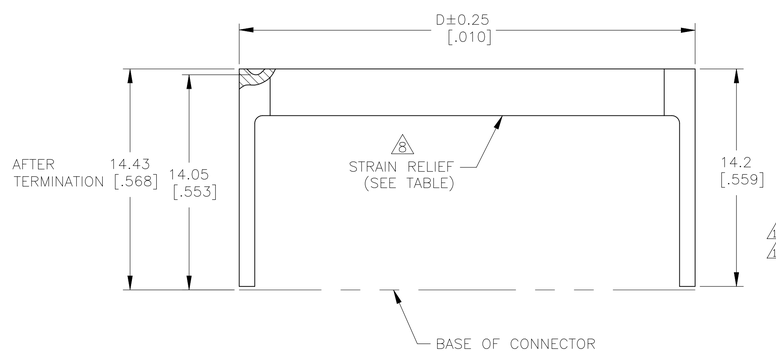

STRAIN RELIEF	CENTER POLARIZER	CONTACT FINISH	D	C	B	A	NUMBER OF POSITIONS	T&B PART NUMBER (REFERENCE)	PART NUMBER
OBSOLETE	YES	YES	3	85.65[3.372]	85.75[3.376]	80.01[3.150]	78.74[3.100]	64	609-6441LF	4-1658526-5
OBSOLETE	NO	YES	3	–	85.75[3.376]	80.01[3.150]	78.74[3.100]	64	609-6430LF	4-1658526-4
	YES	YES	3	67.87[2.672]	67.97[2.676]	62.23[2.450]	60.96[2.400]	50	609-5041LF	2-1658526-4
	NO	YES	3	–	67.97[2.676]	62.23[2.450]	60.96[2.400]	50	609-5030LF	2-1658526-3
OBSOLETE	YES	NO	3	67.87[2.672]	67.97[2.676]	62.23[2.450]	60.96[2.400]	50	609-5001MLF	2-1658526-2
	NO	NO	3	–	67.97[2.676]	62.23[2.450]	60.96[2.400]	50	609-5000MLF	4-1658526-3
	YES	YES	3	55.17[2.172]	55.27[2.176]	49.53[1.950]	48.26[1.900]	40	609-4041LF	2-1658526-1
	NO	YES	3	–	55.27[2.176]	49.53[1.950]	48.26[1.900]	40	609-4030LF	2-1658526-0
OBSOLETE	YES	NO	3	55.17[2.172]	55.27[2.176]	49.53[1.950]	48.26[1.900]	40	609-4001MLF	4-1658526-2
	NO	NO	3	–	55.27[2.176]	49.53[1.950]	48.26[1.900]	40	609-4000MLF	4-1658526-1
10	YES	YES	3	50.09[1.972]	50.19[1.976]	44.45[1.750]	43.18[1.700]	36	609-3641LF	4-1658526-0
10	NO	YES	3	–	50.19[1.976]	44.45[1.750]	43.18[1.700]	36	609-3630LF	3-1658526-8
	YES	YES	3	47.55[1.872]	47.65[1.876]	41.91[1.650]	40.64[1.600]	34	609-3441LF	1-1658526-9
	NO	YES	3	–	47.65[1.876]	41.91[1.650]	40.64[1.600]	34	609-3430LF	1-1658526-8
OBSOLETE	YES	NO	3	47.55[1.872]	47.65[1.876]	41.91[1.650]	40.64[1.600]	34	609-3401MLF	3-1658526-7
OBSOLETE	NO	NO	3	–	47.65[1.876]	41.91[1.650]	40.64[1.600]	34	609-3400MLF	1-1658526-7
OBSOLETE	YES	YES	3	37.39[1.472]	37.49[1.476]	31.75[1.250]	30.48[1.200]	26	609-2641LF	1-1658526-6
	NO	YES	3	–	37.49[1.476]	31.75[1.250]	30.48[1.200]	26	609-2630LF	1-1658526-5
OBSOLETE	YES	NO	3	37.39[1.472]	37.49[1.476]	31.75[1.250]	30.48[1.200]	26	609-2601MLF	3-1658526-6
	NO	NO	3	–	37.49[1.476]	31.75[1.250]	30.48[1.200]	26	609-2600MLF	3-1658526-5
OBSOLETE	YES	YES	3	34.85[1.372]	34.95[1.376]	29.21[1.150]	27.94[1.100]	24	609-2441LF	3-1658526-4
OBSOLETE	NO	YES	3	–	34.95[1.376]	29.21[1.150]	27.94[1.100]	24	609-2430LF	1-1658526-4
OBSOLETE	NO	NO	3	–	34.95[1.376]	29.21[1.150]	27.94[1.100]	24	609-2400MLF	3-1658526-3
	YES	YES	3	29.77[1.172]	29.87[1.176]	24.13[.950]	22.86[.900]	20	609-2041LF	1-1658526-3
	NO	YES	3	–	29.87[1.176]	24.13[.950]	22.86[.900]	20	609-2030LF	1-1658526-2
OBSOLETE	YES	NO	3	29.77[1.172]	29.87[1.176]	24.13[.950]	22.86[.900]	20	609-2001MLF	3-1658526-2
OBSOLETE	NO	NO	3	–	29.87[1.176]	24.13[.950]	22.86[.900]	20	609-2000MLF	3-1658526-0
	NO	NO	4	–	29.87[1.176]	24.13[.950]	22.86[.900]	20	609-2000MP005LF	3-1658526-1
	YES	YES	3	24.69[.972]	24.79[.976]	19.05[.750]	17.78[.700]	16	609-1641LF	1-1658526-1
	NO	YES	3	–	24.79[.976]	19.05[.750]	17.78[.700]	16	609-1630LF	2-1658526-9
	YES	NO	3	24.69[.972]	24.79[.976]	19.05[.750]	17.78[.700]	16	609-1601MLF	1-1658526-0
OBSOLETE	NO	NO	3	–	24.79[.976]	19.05[.750]	17.78[.700]	16	609-1600MLF	2-1658526-8
	YES	YES	3	22.15[.872]	22.25[.876]	16.51[.650]	15.24[.600]	14	609-1441LF	1658526-9
	NO	YES	3	–	22.25[.876]	16.51[.650]	15.24[.600]	14	609-1430LF	1658526-8
OBSOLETE	YES	NO	3	22.15[.872]	22.25[.876]	16.51[.650]	15.24[.600]	14	609-1401MLF	1658526-7
OBSOLETE	NO	NO	3	–	22.25[.876]	16.51[.650]	15.24[.600]	14	609-1400MLF	1658526-6
	YES	YES	3	17.07[.672]	17.17[.676]	11.43[.450]	10.16[.400]	10	609-1041LF	1658526-5
	NO	YES	3	–	17.17[.676]	11.43[.450]	10.16[.400]	10	609-1030LF	1658526-4
OBSOLETE	YES	NO	3	17.07[.672]	17.17[.676]	11.43[.450]	10.16[.400]	10	609-1001MLF	2-1658526-7
OBSOLETE	NO	NO	3	–	17.17[.676]	11.43[.450]	10.16[.400]	10	609-1000MLF	1658526-3
10	YES	YES	3	11.99[.472]	12.09[.476]	6.35[.250]	5.08[.200]	6	609-0641LF	1658526-2
10	NO	YES	3	–	12.09[.476]	6.35[.250]	5.08[.200]	6	609-0630LF	1658526-1
10 OBSOLETE	YES	NO	3	11.99[.472]	12.09[.476]	6.35[.250]	5.08[.200]	6	609-0601MLF	2-1658526-6
10 OBSOLETE	NO	NO	3	–	12.09[.476]	6.35[.250]	5.08[.200]	6	609-0600MLF	2-1658526-5

ELECTRICAL PROPERTIES	
CURRENT RATING	1 AMP
INSULATION RESISTANCE	>1 x 10^9 OHMS @ 500 VDC
DWV	>500 VRMS AT SEA LEVEL
ENVIRONMENTAL PROPERTIES	
TEMPERATURE RATING	-55°C TO 125°C

THIS DRAWING IS A CONTROLLED DOCUMENT.
DIMENSIONING AND TOLERANCING PER ASME Y14.5M-2009

DIMENSIONS: INCHES

TOLERANCES UNLESS OTHERWISE SPECIFIED:
0 PLC ± –
1 PLC ± –
2 PLC ± –
3 PLC ± 0.13[.005]
4 PLC ± –
ANGLES ± 4°

MATERIAL 2
FINISH SEE TABLE

DWN J.GERACE 30SEP03
CHK C.ROHDE 30SEP03
APVD M.WALMSLEY 30SEP03
PRODUCT SPEC —
APPLICATION SPEC —
WEIGHT 0.000000

TE Connectivity

NAME CONNECTOR ASSEMBLY, FEMALE SOCKET TRANSITION

SIZE A1 | CAGE CODE 00779 | DRAWING NO C-1658526 | RESTRICTED TO —

CUSTOMER DRAWING | SCALE 10:1 | SHEET 1 OF 1 | REV G1

4805 (1/15)