THIS DRAWING IS UNPUBLISHED. RELEASED FOR PUBLICATION - , - .
© COPYRIGHT - By - ALL RIGHTS RESERVED.

| REVISIONS | | | | | |
|---|---|---|---|---|---|
| P | LTR | DESCRIPTION | DATE | DWN | APVD |
| | K3 | PART STATUS UPATED IN PART LIST TABLE | 16FEB2018 | SD | PS |

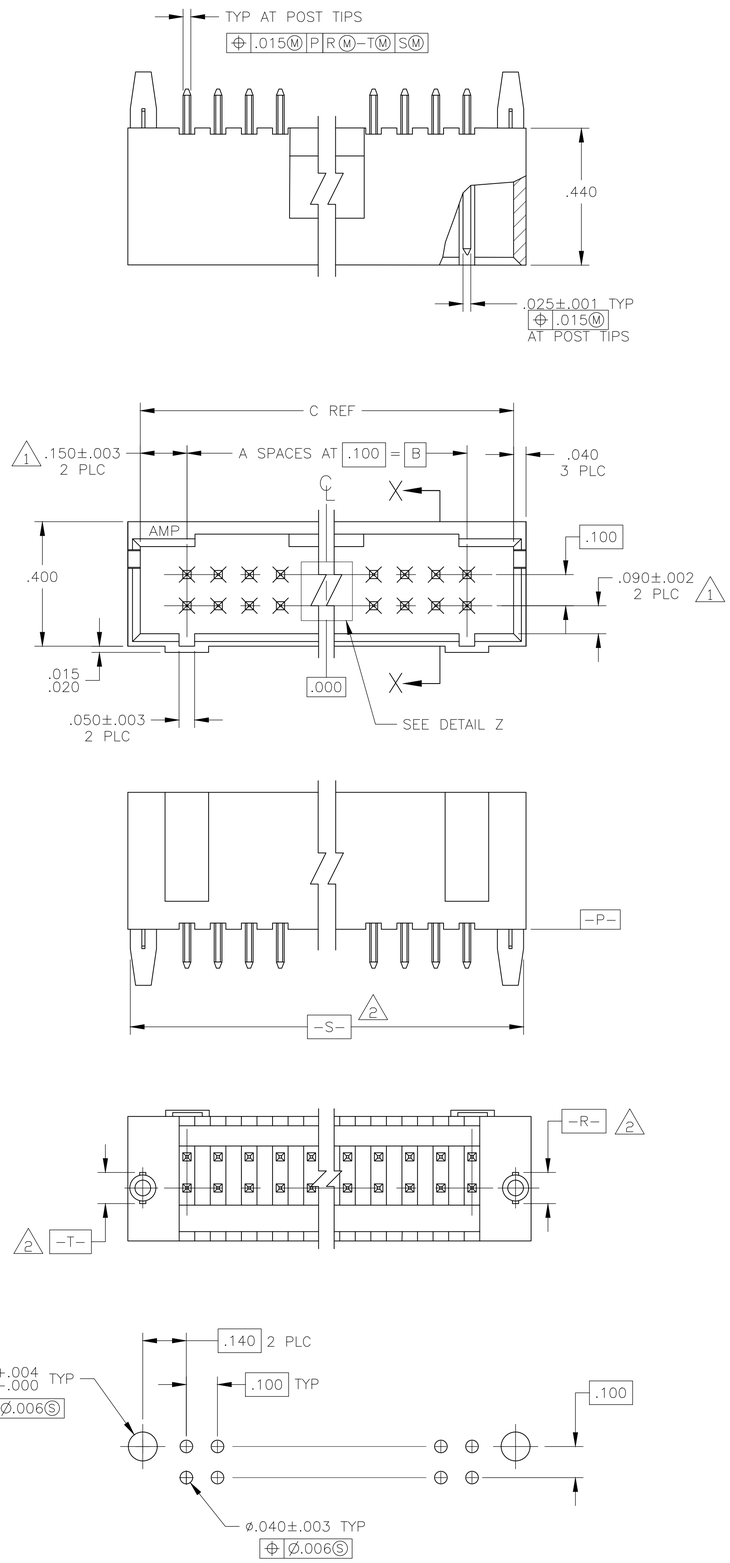


RECOMMENDED HOLE LAYOUT

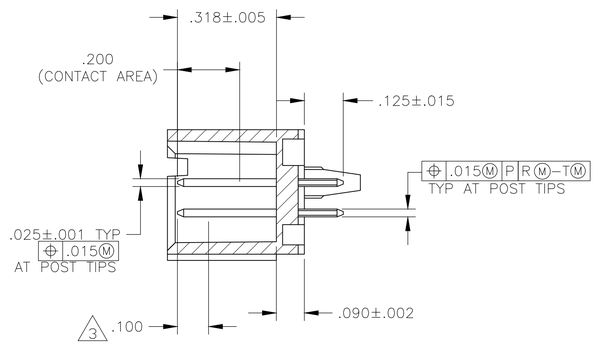


SECTION X–X

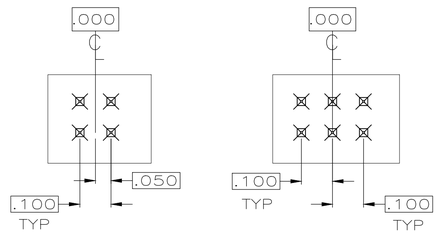


BASIC DIMENSION FOR ODD NO. OF SPACES (SEE TABLE)

BASIC DIMENSION FOR EVEN NO. OF SPACES (SEE TABLE)

DETAIL Z

1. THE NOTED DIMENSIONS APPLY AT THE INTERSECTION OF THE POST AND HOUSING
2. THE NOTED DIMENSIONS APPLY AT THE INTERSECTION WITH DATUM –P–
3. POINT OF MEASUREMENT FOR PLATING THICKNESS
4. PRELIMINARY PART – NOT RELEASED FOR PRODUCTION.
5. MATERIAL: HOUSING– FLAME RETARDANT THERMOPLASTIC, COLOR– BLACK
   POST– PHOS BRONZE
6. FINISH: POST– .000015 GOLD IN CONTACT AREA,
   .000100–.000200 MATTE TIN–LEAD ON SOLDERTAIL,
   ALL OVER .000050 NICKEL
7. FINISH: POST– .000015 GOLD IN CONTACT AREA,
   .000100–.000200 MATTE TIN ON SOLDERTAIL,
   ALL OVER .000050 NICKEL
8. OBSOLETE PARTS: OBSOLETE CIS STREAMLINING PER D.RENAUD/D.SINISI

| | | | | | | | |
|---|---|---|---|---|---|---|---|
| 8 OBSOLETE | | 1.900 | 1.600 | 16 | 34 | ~~6–104317–8~~ |
| 8 OBSOLETE | | 2.000 | 1.700 | 17 | 36 | ~~6–104317–7~~ |
| | | 1.000 | .700 | 7 | 16 | 6–104317–6 |
| | | 2.300 | 2.000 | 20 | 42 | 6–104317–5 |
| 8 OBSOLETE | | 2.700 | 2.400 | 24 | 50 | ~~6–104317–4~~ |
| 8 OBSOLETE | | 2.600 | 2.300 | 23 | 48 | ~~6–104317–3~~ |
| 8 OBSOLETE | | 2.200 | 1.900 | 19 | 40 | ~~6–104317–2~~ |
| | | 1.800 | 1.500 | 15 | 32 | 6–104317–1 |
| | 7 | 1.700 | 1.400 | 14 | 30 | 6–104317–0 |
| | | 1.500 | 1.200 | 12 | 26 | 5–104317–9 |
| 8 OBSOLETE | | 1.400 | 1.100 | 11 | 24 | ~~5–104317–8~~ |
| | | 1.300 | 1.000 | 10 | 22 | 5–104317–7 |
| | | 1.200 | .900 | 9 | 20 | 5–104317–6 |
| | | 1.100 | .800 | 8 | 18 | 5–104317–5 |
| 8 OBSOLETE | | .900 | .600 | 6 | 14 | ~~5–104317–4~~ |
| | | .800 | .500 | 5 | 12 | 5–104317–3 |
| | | .700 | .400 | 4 | 10 | 5–104317–2 |
| | | .500 | .200 | 2 | 6 | 5–104317–1 |
| 8 OBSOLETE | | .600 | .300 | 3 | 8 | 4 ~~1–104317–9~~ |
| 8 OBSOLETE | | 1.900 | 1.600 | 16 | 34 | ~~1–104317–8~~ |
| 8 OBSOLETE | | 2.000 | 1.700 | 17 | 36 | ~~1–104317–7~~ |
| | | 1.000 | .700 | 7 | 16 | 1–104317–6 |
| | | 2.300 | 2.000 | 20 | 42 | 1–104317–5 |
| 8 OBSOLETE | | 2.700 | 2.400 | 24 | 50 | ~~1–104317–4~~ |
| 8 OBSOLETE | | 2.600 | 2.300 | 23 | 48 | ~~1–104317–3~~ |
| | | 2.200 | 1.900 | 19 | 40 | 1–104317–2 |
| | | 1.800 | 1.500 | 15 | 32 | 1–104317–1 |
| SUPERSEDED BY 6–104317–0 | 6 | 1.700 | 1.400 | 14 | 30 | ~~1–104317–0~~ |
| | | 1.500 | 1.200 | 12 | 26 | 104317–9 |
| | | 1.400 | 1.100 | 11 | 24 | 104317–8 |
| SUPERSEDED BY 5–104317–7 | | 1.300 | 1.000 | 10 | 22 | ~~104317–7~~ |
| | | 1.200 | .900 | 9 | 20 | 104317–6 |
| SUPERSEDED BY 5–104317–5 | | 1.100 | .800 | 8 | 18 | ~~104317–5~~ |
| 8 OBSOLETE | | .900 | .600 | 6 | 14 | ~~104317–4~~ |
| SUPERSEDED BY 5–104317–3 | | .800 | .500 | 5 | 12 | ~~104317–3~~ |
| | | .700 | .400 | 4 | 10 | 104317–2 |
| SUPERSEDED BY 5–104317–1 | | .500 | .200 | 2 | 6 | ~~104317–1~~ |
| | PLATING | C | B | A | NO OF POSN | ASSEMBLY PART NUMBER |

THIS DRAWING IS A CONTROLLED DOCUMENT.

DIMENSIONS: INCHES

TOLERANCES UNLESS OTHERWISE SPECIFIED:
0 PLC ± –
1 PLC ± –
2 PLC ± –
3 PLC ± .005
4 PLC ± –
ANGLES ± –

MATERIAL 5

FINISH SEE TABLE

DWN H MOLL 10–19–87
CHK R FEIDT 10–19–87
APVD –
PRODUCT SPEC –
APPLICATION SPEC –
WEIGHT –

TE Connectivity

NAME HDR ASSY, MOD II, SHROUDED 4 SIDES, DBL ROW, VERT .100X.100 CL, W/ .025 SQ POSTS

SIZE A1 | CAGE CODE 00779 | DRAWING NO C–104317 | RESTRICTED TO –

CUSTOMER DRAWING | SCALE 4:1 | SHEET 1 OF 1 | REV K3

4805 (1/15)