© 2025 TE Connectivity. All Rights Reserved.

REVISIONS					
P	LTR	DESCRIPTION	DATE	DWN	APVD
	T	REVISED PER ECO-15-008006	17NOV2015	NK	MM
	U	RESIN CHANGE (LOW TEMP RESIN TO HIGH TEMP RESIN)	03JUL2025	RS	GVP

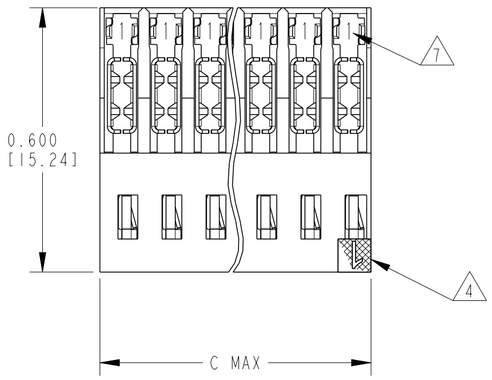

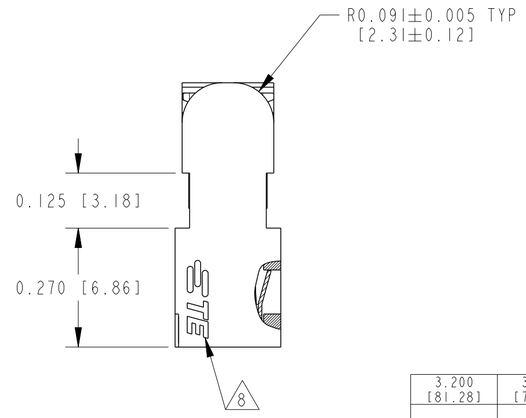

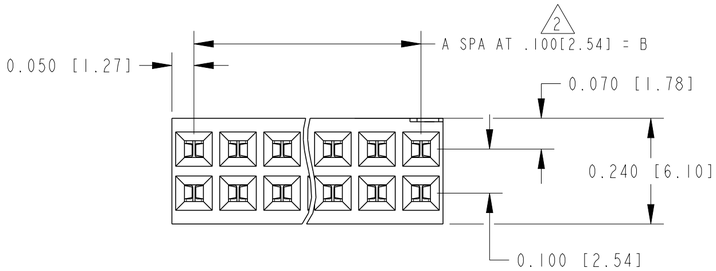

1. .000030[0.00076] GOLD IN THE CONTACT AREA, .000050 -.000100[.00127-0.00254] TIN-LEAD IN THE TERMINATION AREA, ALL OVER .000050[0.00127] NICKEL.

2. TOLERANCE NON-CUMULATIVE.

3. .000030[0.00076] GOLD IN THE CONTACT AREA, .000050 -.000100[.00127-0.00254] TIN IN THE TERMINATION AREA, ALL OVER .000050[0.00127] NICKEL.

4. MOLDED CIRCUIT #1 IDENTIFIER IN LOCATION SHOWN.

5. OBSOLETE PART NUMBER

6. USE WITH 26-30 AWG WIRE SIZE, .050[.27] MAX INSULATION DIA., .015[0.381] MAX INSULATION WALL THICKNESS.

7. CONTACT IDENTIFICATION NUMBER "1" LOCATED IN THIS AREA.

8. TE LOGO ON EITHER SIDE.

9. OBSOLETE PARTS: OBSOLETE CIS STREAMLINING PER D.RENAUD/D.SINISI

C	B	A	NO OF POS		ASSEMBLY PART NUMBER
3.200 [81.28]	3.100 [78.74]	31	64	3	8-102393-0
3.000 [76.20]	2.900 [73.66]	29	60	3	7-102393-8
2.700 [68.58]	2.600 [66.04]	26	54	3	7-102393-5
2.500 [63.50]	2.400 [60.96]	24	50	3	7-102393-3
2.000 [50.80]	1.900 [48.26]	19	40	3	6-102393-8
1.700 [43.18]	1.600 [40.64]	16	34	3	6-102393-5
1.600 [40.64]	1.500 [38.10]	15	32	3	6- -4
1.500 [38.10]	1.400 [35.56]	14	30	3	6- -3
1.400 [35.56]	1.300 [33.02]	13	28	3	6- -2
1.300 [33.02]	1.200 [30.48]	12	26	3	6- -1
1.200 [30.48]	1.100 [27.94]	11	24	3	6- -0
1.100 [27.94]	1.000 [25.40]	10	22	3	5- -9
1.000 [25.40]	0.900 [22.86]	9	20	3	5- -8
0.900 [22.86]	0.800 [20.32]	8	18	3	5- -7
0.800 [20.32]	0.700 [17.78]	7	16	3	5- -6
0.700 [17.78]	0.600 [15.24]	6	14	3	5- -5
0.600 [15.24]	0.500 [12.70]	5	12	3	5- -4
0.500 [12.70]	0.400 [10.16]	4	10	3	5- -3
0.400 [10.16]	0.300 [7.62]	3	8	3	5- -2
0.300 [7.62]	0.200 [2.59]	2	6	3	5-102393-1

	C	B	A	NO OF POS		ASSEMBLY PART NUMBER
SUPERSEDED	3.600 [91.44]	3.500 [88.90]	35	72		~~3-102393-4~~
SUPERSEDED	3.500 [88.90]	3.400 [86.36]	34	70		~~3- -3~~
SUPERSEDED	3.400 [86.36]	3.300 [83.82]	33	68		~~3- -2~~
SUPERSEDED	3.300 [83.82]	3.200 [81.28]	32	66		~~3- -1~~
	3.200 [81.28]	3.100 [78.74]	31	64	1	3- -0
SUPERSEDED	3.100 [78.74]	3.000 [76.20]	30	62		~~2- -9~~
	3.000 [76.20]	2.900 [73.66]	29	60	1	2- -8
SUPERSEDED	2.900 [73.66]	2.800 [71.12]	28	58		~~2- -7~~
OBSOLETE	2.800 [71.12]	2.700 [68.58]	27	56		~~2- -6~~
9 OBSOLETE	2.700 [68.58]	2.600 [66.04]	26	54	1	~~2- -5~~
SUPERSEDED	2.600 [66.04]	2.500 [63.50]	25	52		~~2- -4~~
	2.500 [63.50]	2.400 [60.96]	24	50	1	2- -3
OBSOLETE	2.400 [60.96]	2.300 [58.42]	23	48		~~2- -2~~
OBSOLETE	2.300 [58.42]	2.200 [55.88]	22	46		~~2- -1~~
OBSOLETE	2.200 [55.88]	2.100 [53.34]	21	44		~~2- -0~~
SUPERSEDED	2.100 [53.34]	2.000 [50.80]	20	42		~~1- -9~~
	2.000 [50.80]	1.900 [48.26]	19	40	1	1- -8
SUPERSEDED	1.900 [48.26]	1.800 [45.72]	18	38		~~1- -7~~
SUPERSEDED	1.800 [45.72]	1.700 [43.18]	17	36		~~1- -6~~
	1.700 [43.18]	1.600 [40.64]	16	34	1	1- -5
9 OBSOLETE	1.600 [40.64]	1.500 [38.10]	15	32	1	~~1- -4~~
	1.500 [38.10]	1.400 [35.56]	14	30	1	1- -3
9 OBSOLETE	1.400 [35.56]	1.300 [33.02]	13	28	1	~~1- -2~~
	1.300 [33.02]	1.200 [30.48]	12	26	1	1- -1
9 SUPERSEDED	1.200 [30.48]	1.100 [27.94]	11	24	1	~~1- -0~~
9 OBSOLETE	1.100 [27.94]	1.000 [25.40]	10	22	1	~~-9~~
	1.000 [25.40]	0.900 [22.86]	9	20	1	-8
	0.900 [22.86]	0.800 [20.32]	8	18	1	-7
	0.800 [20.32]	0.700 [17.78]	7	16	1	-6
	0.700 [17.78]	0.600 [15.24]	6	14	1	-5
	0.600 [15.24]	0.500 [12.70]	5	12	1	-4
	0.500 [12.70]	0.400 [10.16]	4	10	1	-3
SUPERSEDED	0.400 [10.16]	0.300 [7.62]	3	8	1	~~-2~~
	0.300 [7.62]	0.200 [2.59]	2	6	1	102393-1

THIS DRAWING IS A CONTROLLED DOCUMENT.

DIMENSIONS: INCHES [mm]

TOLERANCES UNLESS OTHERWISE SPECIFIED:
0 PLC ±-
1 PLC ±-
2 PLC ±-
3 PLC ±.005[0.13]
4 PLC ±-
ANGLES ±-
FINISH
CONTACTS: SEE TABLE

MATERIAL
HOUSING:GLASS FILLED THERMOPLASTIC, UL 94-V0 RATED, COLOR: BLACK
CONTACTS: PHOS BRONZE

DWN L D RINGLEY 7-1-85
CHK P C deJONG 7-1-85
APVD P C deJONG 7-1-85
PRODUCT SPEC -
APPLICATION SPEC -
WEIGHT -

TE Connectivity

NAME ASSEMBLY, MASS TERMINATION AMPMODU, DOUBLE ROW, &.100X.100 C/L, #26-#30 AWG WIRE SIZE

SIZE	CAGE CODE	DRAWING NO	RESTRICTED TO
A2	00779	C-102393	-

CUSTOMER DRAWING | SCALE 4:1 | SHEET 1 OF 1 | REV U